ABBREVIATION LIST

&	AND
L	ANGLE
@	AT
℄	CENTERLINE
ø	DIAMETER
#	POUND
ℙ	PROPERTY LINE
AFF	ABOVE FINISH FLOOR
ACC	ACCESSIBLE
ADDL	ADDITIONAL
ADJ	ADJACENT
A/C	AIR CONDITIONING
ALT	ALTERNATE
ALUM	ALUMINUM
AB	ANCHOR BOLT
APPROX	APPROXIMATE
ARCH	ARCHITECT(URAL)
AC	ASPHALTIC CONCRETE
BM	BEAM
BET	BETWEEN
BLKG	BLOCKING
BD	BOARD
BOT	BOTTOM
BUR	BUILD UP ROOFING
BLDG	BUILDING
CAB	CABINET
CBC	CALIFORNIA BUILDING CODE
CLG	CEILING
CEM	CEMENT
CTR	CENTER
CER	CERAMIC
CO	CLEAN OUT
CLR	CLEAR
COMP	COMPOSITION
CONC	CONCRETE
CMU	CONCRETE MASONRY UNIT
CONST	CONSTRUCTION
CONT	CONTINUOUS
CJ	CONTROL JOINT
COORD	COORDINATE
CG	CORNER GUARD
DEMO	DEMOLITION
DEPT	DEPARTMENT
DET	DETAIL
DIAG	DIAGONAL
DIM	DIMENSION
DISP	DISPENSER
DSA	DIV. OF STATE ARCH.
DF-L	DOUGLAS FIR
DBL	DOUBLE
DS	DOWNSPOUT
DWR	DRAWER
DWG(S)	DRAWING(S)
DF	DRINKING FOUNTAIN
EA	EACH
EF	EACH FACE
ES	EACH SIDE
E	EAST
EP	EDGE OF PAVEMENT
ELEC	ELECTRICAL
ENL	ENLARGED
ELEV	ELEVATOR
ENGR	ENGINEER
EQ	EQUAL
EQUIP	EQUIPMENT
ETC	ETCETERA
(E)	EXISTING
EXP	EXPANSION
EJ	EXPANSION JOINT
EXT	EXTERIOR
FOB	FACE OF BLOCK
FOC	FACE OF CONCRETE
FOF	FACE OF FINISH
FOM	FACE OF MASONRY
FOS	FACE OF STUD
FS	FAR SIDE
FRP	FIBERGLASS REINFORCED PANEL
FIN	FINISH
FF	FINISH FLOOR
FE	FIRE EXTINGUISHER
FEC	FIRE EXTINGUISHER CABINET
FPRF	FIREPROOFING
FR	FIRE RATING
FHMS	FLAT HEAD MACHINE SCREW
FHWS	FLAT HEAD WOOD SCREW
FLR	FLOOR
FD	FLOOR DRAIN
FS	FLOOR SINK
FT	FOOT OR FEET
FTG	FOOTING
FDN	FOUNDATION
FUT	FUTURE
GA	GAUGE
GALV	GALVANIZED
GI	GALVANIZED IRON
GL	GLASS
GLB	GLUED LAMINATED BEAM
GB	GRAB BAR
GR	GRADE
GND	GROUND
GYP	GYPSUM
HDWD	HARDWOOD
HD	HEAD
HDR	HEADER
HVAC	HEATING/ VENTILATING/ AIR CONDITIONING
HT	HEIGHT
HC	HOLLOW CORE
HM	HOLLOW METAL
HORIZ	HORIZONTAL
HB	HOSE BIB
INCAND	INCANDESCENT
IN	INCH
INCL	INCLUDE
ID	INSIDE DIMENSION/ DIAMETER
INSUL	INSULATION
INT	INTERIOR
ICBO	INTERNATIONAL CONFERENCE OF BUILDING OFFICIALS
JAN	JANITOR
JT	JOINT
JST	JOIST
LAB	LABORATORY
LAM	LAMINATED
LAV	LAVATORY
MB	MACHINE BOLT
MH	MANHOLE
MANUF	MANUFACTURER
MATL	MATERIAL
MAX	MAXIMUM
MECH	MECHANICAL
MC	MEDICINE CABINET
MTL	METAL
MEZZ	MEZZANINE
MIN	MINIMUM
MR	MIRROR
MISC	MISCELLANEOUS
NS	NEAR SIDE
(N)	NEW
NOM	NOMINAL
N	NORTH
NIC	NOT IN CONTRACT
NTS	NOT TO SCALE
NO	NUMBER
O.C.	ON CENTER
OPNG	OPENING
OPP	OPPOSITE
ORIG	ORIGINAL
OD	OUTSIDE DIMENSION/ DIAMETER
O/	OVER
O/O	OVER AND OUT
OFCI	OWNER FURNISHED, CONTRACTOR INSTALLED
OFOI	OWNER FURNISHED, OWNER INSTALLED
PR	PAIR
PTD	PAPER TOWEL DISPENSER
PTR	PAPER TOWEL RECEPTACLE
PART	PARTIAL
PRTN	PARTITION
PERF	PERFORATED
PA	PLANTED AREA
PLAS	PLASTER
PLASLAM	PLASTIC LAMINATE
PL	PLATE
PLBG	PLUMBING
PLYWD	PLYWOOD
POC	POINT OF CONNECTION
PVC	POLYVINYL CHLORIDE
PSF	POUNDS PER SQUARE FOOT
PSI	POUNDS PER SQUARE INCH
PREFAB	PREFABRICATED
PREFIN	PREFINISHED
PT	PRESSURE TREATED
PROJ	PROJECTION
PL	PROPERTY LINE
QT	QUARRY TILE
R	RADIUS
REC	RECESSED
RDWD	REDWOOD
REF	REFERENCE/REFER
RFG	REFRIGERATOR
REINF	REINFORCED (ING) (MENT)
REQ'D	REQUIRED
RET	RETAINING
RTN	RETURN
REV	REVISION
ROW	RIGHT OF WAY
RM	ROOM
RD	ROOF DRAIN
RO	ROUGH OPENING
RHWD	ROUND HEAD WOOD SCREW
RR	REST ROOM
SND	SANITARY NAPKIN DISPENSER
SNR	SANITARY NAPKIN RECEPTOR
SSMH	SANITARY SEWER MANHOLE
SCHED	SCHEDULE
SCD	SEAT COVER DISPENSER
SECT	SECTION
SPTD/WR	SERIES PAPER TOWEL DISPENSER/ WASTE RECEPTACLE
STSC/TTD	SERIES TOILET SEAT COVER/ TOILET TISSUE DISPENSER
SHTG	SHEATHING
SHT	SHEET
SM	SHEET METAL
SMS	SHEET METAL SCREW
SIM	SIMILAR
SOG	SLAB ON GRADE
SD	SOAP DISPENSER
SC	SOLID CORE
S	SOUTH
SPEC(S)	SPECIFICATION(S)
SB	SPLASH BLOCK
SQ	SQUARE
SF	SQUARE FOOT/ FEET
SY	SQUARE YARD
SS	STAINLESS STEEL OR SANITARY SEWER
STD	STANDARD
STL	STEEL
STOR	STORAGE
ST	STREET
STR	STRUCTURAL
SUSP	SUSPENDED
SYM	SYMMETRICAL
TEL	TELEPHONE
TEMP	TEMPERED
THK	THICK(NESS)
TPH	TOILET PAPER HOLDER
T&G	TONGUE AND GROVE
T&B	TOP AND BOTTOM
TC	TOP OF CONCRETE/ CURB
TOD	TOP OF DECK
TOF	TOP OF FOOTING
TOJ	TOP OF JOIST
TOP	TOP OF PARAPET
TOS	TOP OF SHEATHING
TOSL	TOP OF SLAB
TOS	TOP OF STEEL
TOW	TOP OF WALL
TOPO	TOPOGRAPHIC
TB	TOWEL BAR
T	TREAD/ TOILET
TYP	TYPICAL
UG	UNDERGROUND
UNFIN	UNFINISHED
UBC	UNIFORM BUILDING CODE
UON	UNLESS OTHERWISE NOTED
UR	URINAL
UTL	UTILITY
VIF	VERIFY IN FIELD
VERT	VERTICAL
VCT	VINYL COMPOSITION TILE
VWC	VINYL WALL COVERING
WC	WATER CLOSET
WH	WATER HEATER
WR	WATER RESISTANT
WTRP	WATERPROOF
WP	WEATHERPROOF
WT	WEIGHT
W	WEST/ WASTE/ WATER
WDW	WINDOW
WG	WIRE GLASS
W/	WITH
W/O	WITHOUT
WD	WOOD
WS	WOOD SCREW

BUILDING INFORMATION

OWNER:
JOSEPH SAMPLE
P.O. BOX 555
STOCKTON, CA 95201

SITE:
15555 JACKSON RD.
STOCKTON, CA

PROJECT SCOPE:

SINGLE FAMILY RESIDENCE

OCCUPANCY GROUP:	R3/UN
OCCUPANCY CATEGORY:	II
SITE ELEVATION:	<2000'
GROUND SNOW LOAD:	20#/SF
ROOF LOAD:	LL=20#/SF DL=10#/SF
FLOOR LOAD:	LL=40#/SF DL=10#/SF
WIND SPEED:	85MPH
SOILS SITE CLASSIFICATION:	D (ASUMED)
SEISMIC DESIGN CATAGORY:	C

BUILDING CALCULATIONS

MAIN FLOOR	1751 S.F.
GARAGE	576 S.F.
PORCH	217 S.F.
DECK	333 S.F.

GENERAL NOTES

GENERAL NOTES:
1. ALL WORK SHALL CONFORM TO MINIMUM STANDARDS OF THE 2019 EDITION OF THE CBC, CMC, CPC, CEC, CFC, CALIFORNIA TITLE-24, AND LOCAL ORDINANCES AND MUNICIPAL CODE.

2. ALL WORK DESCRIBED IN THE DRAWINGS SHALL BE VERIFIED FOR DIMENSION, GRADE, EXTENT, AND COMPATIBILITY TO THE EXISTING SITE. ANY DISCREPANCIES AND UNEXPECTED CONDITIONS THAT AFFECT OR CHANGE THE WORK DESCRIBED IN THE DOCUMENTS SHALL BE BROUGHT TO THE DESIGNERS AND ENGINEERS ATTENTION IMMEDIATLY. DO NOT PROCEED WITH THE WORK IN THE AREA OF DISCREPANCIES UNTIL ALL SUCH DISCREPANCIES ARE RESOLVED. IF THE CONTRACTOR CHOOSES TO DO SO, HE SHALL BE PROCEEDING AT HIS OWN RISK.

3. DIMENSIONS SHOWN SHALL TAKE PRECEDENCE OVER DRAWING SCALE OR PROPORTION. LARGER SCALE DRAWINGS SHALL TAKE PRECEDENCE OVER SMALLLER SCALE DRAWINGS.

4. ALL GRADES ADJACENT TO BUILDINGS SHALL SLOPE AWAY FROM THE BUILDING AT 5% SLOPE FOR A MIN. DISTANCE OF 10 FEET.

5. WATER DRAINAGE IS OF EXTREME CONCERN DURING AND AFTER CONSTRUCTION. IT SHALL BE THE CONTRACTORS RESPONSABILITY TO TAKE PRECAUTIIONARY STEPS TOWARD PREVENTING THE INTRUSION OF WATER IN AND UNDER THE BUILDING SITE. THE INSTALLATION OF DRAIN PIPES AND/OR SURFACE DRAINAGE MAY BE REQUIRED IN PREVENTING WATER INTRUSION. ALL DRAIN PIPES SHALL BE PROPERLY INSTALLED SO THAT WATER IS DIVERTED AROUND THE SITE AND SHALL EXTEND TO DAYLIGHT.

SYMBOLS

1/2 DETAIL REF / SHEET REF

1/2 SECTION REF / SHEET REF

A / D 1/2 B / C INTERIOR ELEVATIONS

N REFERENCE NORTH

8 REVISION 8 OF REVISIONS

1 WALL TYPES LABEL

±0" ELEVATION LEVEL LABEL

SHEET INDEX

1	COVER SHEET
2	ELEVATIONS
3	FLOOR PLAN
4	FOUNDATION PLAN
5	FLOOR FRAMING PLAN
6	ROOF FRAMING PLAN
7	DETAILS
8	SHEARWALL PLAN
9	SECTIONS
10	INSULATION
11	ELECTRICAL PLAN
12	SOLAR-PV

PROPOSED RESIDENCE FOR
JOSEPH SAMPLE

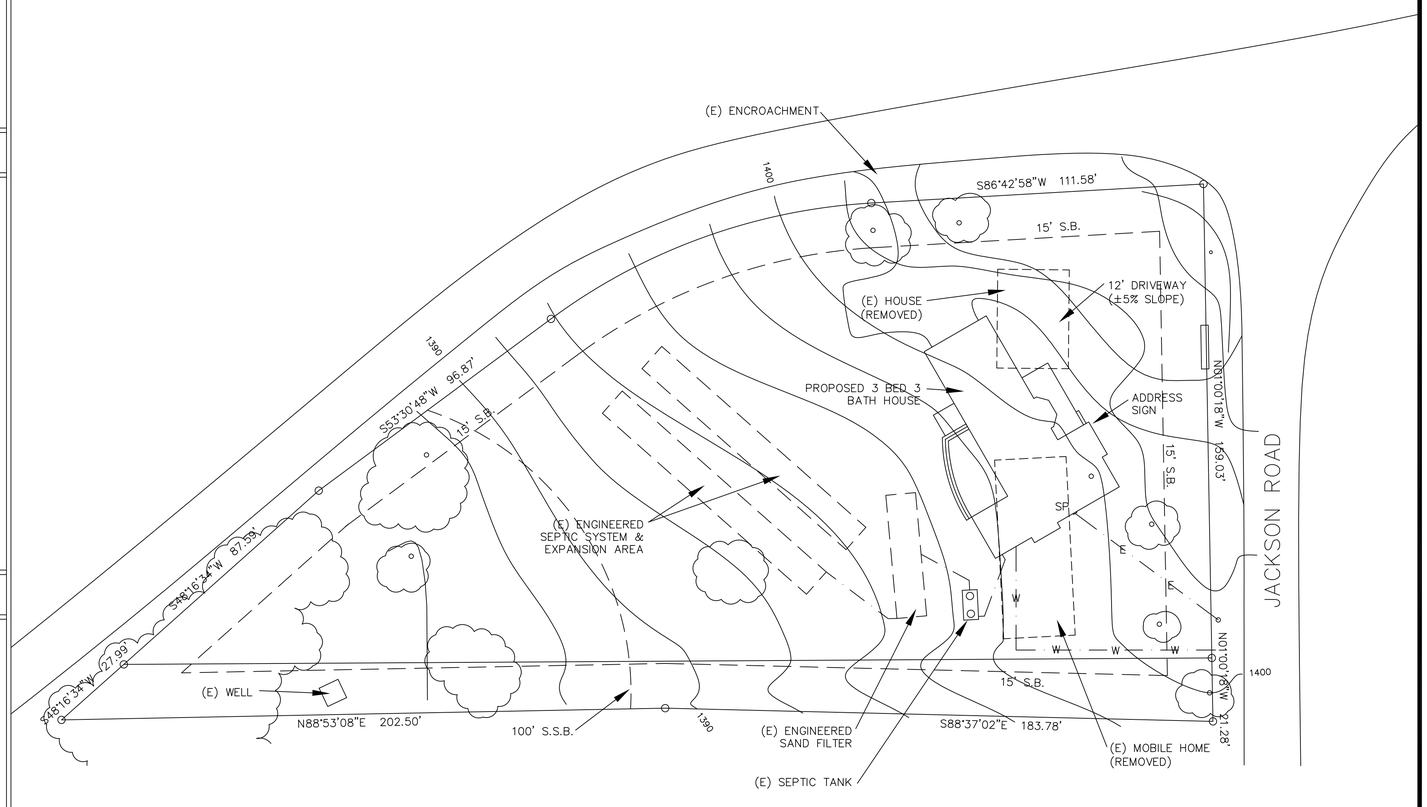

plot plan
1"=50'

DESIGN-IT-RIGHT ARCHITECTS
456 BROWN STREET, SAN FRANCISCO, CA
PH: (415) 356-9833 FAX 867-5309

SITE INFORMATION:
15555 JACKSON RD.
STOCKTON, CA

PROPOSED PROJECT FOR:
JOSEPH SAMPLE

DRAWNING DESCRIPTION
COVER

REVISION DATE	BY

DRAWN BY	M. ROGERS
DATE	FEB 2020
SCALE	1/4"=1'-0"
JOB NAME	SAMPLE
ACAD DWG	SAMPLE
SHEET NO	1
OF	12

FRONT ELEVATION

NORTHEAST (49°) 1/4"=1'-0"

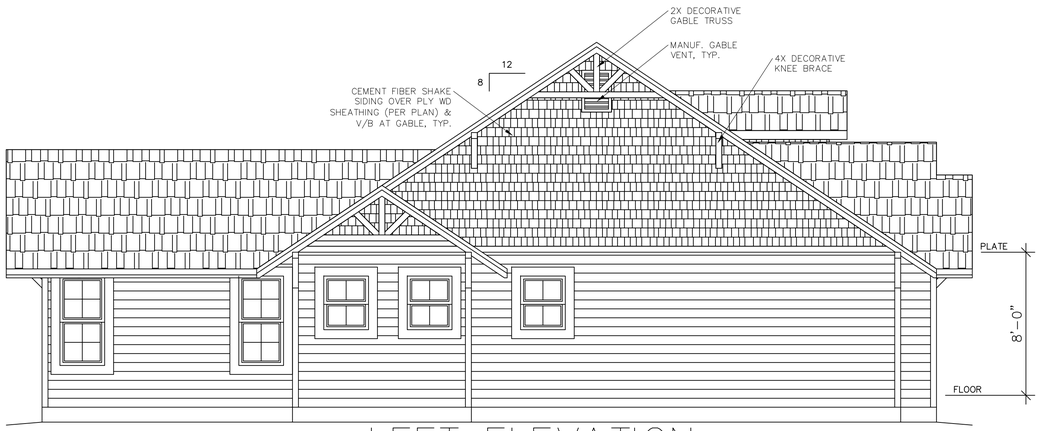

LEFT ELEVATION

SOUTHEAST 1/4"=1'-0"

RIGHT ELEVATION

NORTHWEST 1/4"=1'-0"

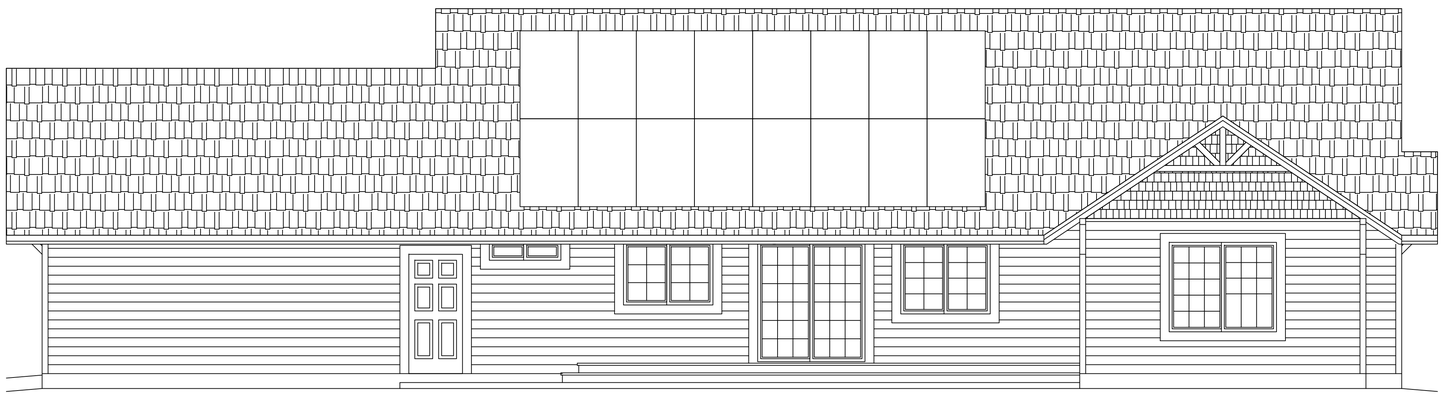

LEFT ELEVATION

SOUTHWEST 1/4"=1'-0"

DESIGN-IT-RIGHT ARCHITECTS
456 BROWN STREET, SAN FRANCISCO, CA
PH: (415) 356-9633 FAX 867-5309

SITE INFORMATION:
15555 JACKSON RD.
STOCKTON, CA

PROPOSED PROJECT FOR:
JOSEPH SAMPLE

DRAWNING DESCRIPTION
ELEVATIONS

REVISION	DATE	BY

DRAWN BY
M. ROGERS
DATE
FEB 2020
SCALE
1/4"=1'-0"
JOB NAME
SAMPLE
ACAD DWG
SAMPLE
SHEET NO.
2
OF
12

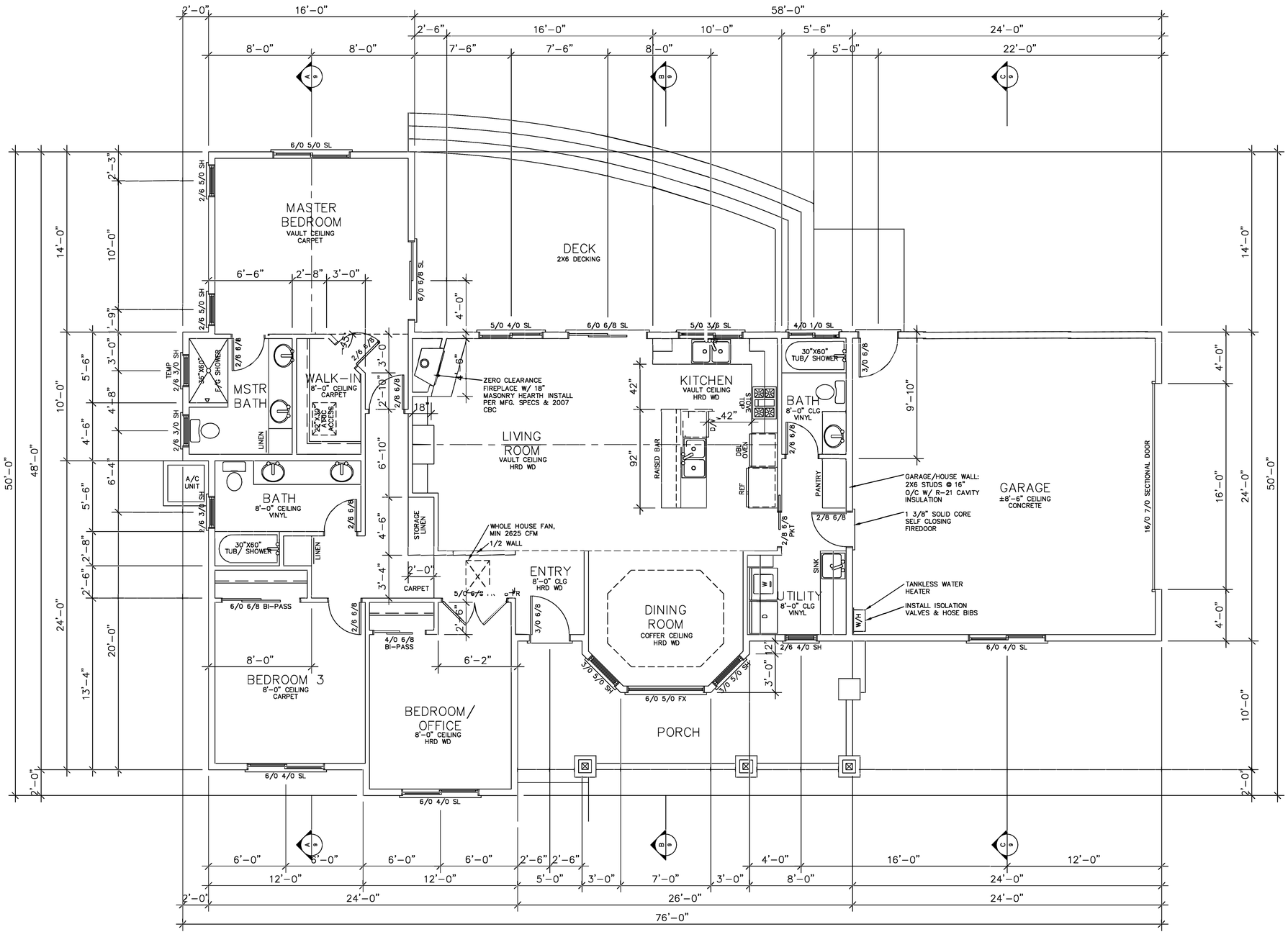

FLOOR PLAN NOTES:

INSULATION

1. ROOF/ATTIC: INSTALL R-38 LOOSE-FILL FIBERGLASS INSULATION IN CEILING & R-19 LOOSE-FILL INSULATION W/ BOX NETTING BELOW ROOF DECK (PER MFG SPECS).
2. EXTERIOR WALLS: INSTALL R-21 FIBERGLASS BATT INSULATION IN 2X6 WALL CAVITY & R-5 EPS RIGID FOAM INSULATION OVER SHEATHING.
3. GARAGE TO HOUSE WALLS: INSTALL R-21 FIBERGLASS BATT INSULATION IN 2X6 WALL CAVITY.
4. KNEE WALLS: INSTALL R-21 FIBERGLASS BATT INSULATION IN 2X6 WALL CAVITY.
5. FLOORS: INSTALL R-19 FIBERGLASS BATT INSULATION BETWEEN FLOOR JOISTS, FASTEN W/LIGHTNING RODS @ 24"O/C.
6. ATTIC ACCESS PANEL SHALL HAVE AN R-38 INSULATION BATT ATTACHED & PANEL SHALL BE WEATHERSTRIPPED.

WINDOWS & DOORS

6. ALL WINDOWS SHALL BE "REALLY GOOD WINDOW CO." SERIES: "BEST EVER" VINYL FRAMED & NFRC RATED WITH A MAXIMUM U-FACTOR OF 0.30 AND A MAXIMUM SHGC OF 0.23.
7. ALL WINDOWS SHALL BE HAVE A MINIMUM OF (1) TEMPERED PANE OR GLASS BLOCK, OR HAVE A FIRE-RESISTANCE RATING OF NOT LESS THAN 20 MINUTES.
8. AT LEAST ONE WINDOW IN EACH BEDROOM SHALL MEET EMERGENCY ESCAPE REQUIREMENTS. A MINIMUM NET CLEAR OPENING OF 5 SQUARE FEET; MINIMUM NET CLEAR OPENING HEIGHT OF 24 INCHES; MINIMUM NET CLEAR OPENING WIDTH OF 20 INCHES; AND A CLEAR OPENING MAX HEIGHT NOT TO EXCEED 44 INCHES ABOVE THE FLOOR.
9. ALL EXTERIOR DOORS SHALL HAVE DEAD BOLTS W/ STEEL PLATE @ THE DEAD BOLT STRIKER, SOLID SHIM 6" ABOVE & BELOW W/ 2-#8X2" SCREWS.
10. FRONT DOOR SHALL HAVE A PEEP HOLE OR VISION PANEL.
11. EXTERIOR DOORS ARE NON-NFRC RATED.
12. ALL EXTERIOR DOORS SHALL BE OF APPROVED NONCOMBUSTIBLE CONSTRUCTION OR SOLID CORE WOOD AND HAVING STILES & RAILES NOT LESS THAN 1 3/8" THICH W/ INTERIOR FIELD PANELS NO LESS THAN 1 1/4" THICK, OR SHALL HAVE A FIRE RESISTANCE RATING OF NOT LESS THAN 20 MINUTES.
13. ALL LANDINGS W/ SLIDERS OR IN SWING DOORS SHALL HAVE A MAXIMUM STEP DOWN OF 7 3/4" MEASURED FROM TOP OF FLOOR.

MECHANICAL & PLUMBING

1. ALL DUCTS SHALL BE R-8 FLEX DUCTING IN ATTIC. SEAL ALL CONNECTIONS & PENETRATIONS. HERS VERIFIED DUCT LEAKAGE
2. PERMANENT LABEL AT RETURN FILTER GRILL SHALL READ "USE ONLY REPLACEMENT FILTERS WITH AN INTIAL RESISTANCE LESS THAN 0.032 AT 400 CFM AIRFLOW RATE"
3. INDOOR AIR QUALITY MIN VENTILATION AIRFLOW RATE = 82.5 CFM.
4. WHOLE HOUSE FAN MIN AIRFLOW RATE = 2625.5 CFM
5. INSTALL ISOLATION VALVES AND HOSE BIBS AT TANKLESS WATER HEATER
6. INSULATE ALL HOT WATER PIPES W/ MIN 1" PIPE INSULATION
7. T&P VALVE ON WATER HEATER DRAINED TO OUTSIDE
8. GAS LINE TO WATER HEATER W/ 200 KBTU/H SUPPLY CAPACITY
9. MAXIMUM FLUSH VOLUME OF ALL WATER CLOSETS SHALL BE NO MORE THAN 1.6 GALLONS
10. ALL TUB/ SHOWER OPENINGS SHALL BE RODENT PROOF, WITH 1" CEMENT COVERING IN AN APPROVED MANNER
11. ALL SHOWERS AND TUB/ SHOWER WALLS SHALL HAVE SMOOTH, HARD, NONABSORBENT SURFACE OVER A MOISTURE RESISTANT UNDERLAYMENT TO A HEIGHT OF 70" ABOVE DRAIN INLET.
12. DRYER DUCT TO BE SMOOTH METAL DUCT THAT EXTENDS TO OUTSIDE WITH A BACKDRAFT DAMPER, 14' MAX LENGTH, ONCLUDING (2) 90° ELBOWS PER CMC.

MECHANICAL SCHEDULE		
SYSTEM TYPE	SYSTEM REQUIREMENTS	NOTES
HEATING	GAS FURNACE, 60 KBTU/H OUTPUT, 80% AFUE	LOCATED IN ATTIC
COOLING	SPLIT 3 1/2 TON AC UNIT, 14 SEER, 12.2 EER. 42 KBTU/H TOTAL OUTPUT	HERS VERIFIED AIRFLOW, FAN EFFICIENCY, REFIGERANT CHARGE
DUCTS	R-8 FLEX DUCTS (IN ATTIC) - MIN. 350 CFM/TON OR MIN GRILL SIZE TABLE 150.0-B OR C	HERS VERIFIED DUCT LEAKAGE, MIN MERV 6 FILTER MEDIA ON RETURN
WHOLE HOUSE FAN		N/A
INDOOR AIR QUALITY (IAQ)	PANASONIC, MODEL FV-1115VK2, 110 CFM	LOCATED IN LAUNDRY ROOM
DOMESTIC HOT WATER (DHW)	0.82 EF TANKLESS WATER HEATER, 0.0 GAL, 199.9 KBTU/H	ALL H/W PIPES INSULATED (NO HERS)

MAIN FLOOR PLAN

1/4"=1'-0"

BUILDING CALCULATIONS

MAIN FLOOR	1751 S.F.
GARAGE	576 S.F.
PORCH	217 S.F.
DECK	333 S.F.

DESIGN-IT-RIGHT ARCHITECTS
456 BROWN STREET, SAN FRANCISCO CA.
PH: (415) 355-9833 FAX 867-5109

SITE INFORMATION:
15555 JACKSON RD.
STOCKTON, CA

PROPOSED PROJECT FOR:
JOSEPH SAMPLE

DRAWNING DESCRIPTION
MAIN FLOOR PLAN

REVISION DATE	BY

DRAWN BY
M. ROGERS
DATE
FEB 2020
SCALE
1/4"=1'-0"
JOB NAME
SAMPLE
ACAD DWG
SAMPLE
SHEET NO
3
OF
12

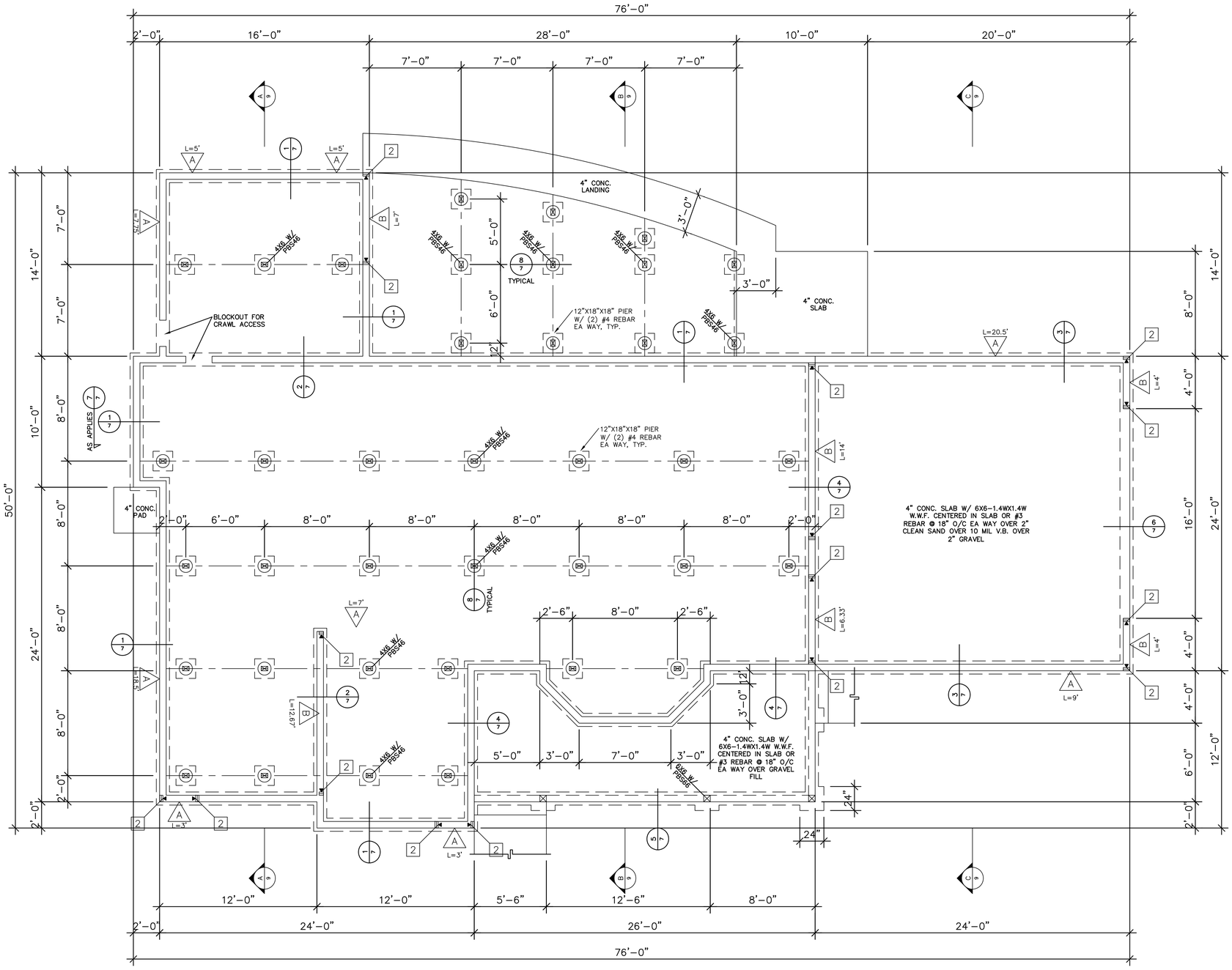

FOUNDATION PLAN

1/4"=1'-0"

CONCRETE WORK:

1. CONCRETE SHALL CONFORM TO ASTM C 94 AND SHALL HAVE A 28-DAY (MINIMUM) COMPRESSIVE STRENGTH OF 2500psi (SPECIAL INSPECTION IS NOT REQUIRED) U.O.N.

2. LARGE AGGREGATE: 3/4" MAX.; SLUMP: 4" MAX.

3. FOUNDATION: f'c (min) = 2500psi
   PIERS: f'c (min) = 2500psi(*)
   SLABS: f'c (min) = 2500psi

4. STEEL REINFORCEMENT AND STEEL WIRE SHALL CONFORM WITH ASTM A 615 AND A 82, RESPECTFULLY. FOR #4 BARS AND/OR SMALLER USE GRADE 40 AND FOR #5 BARS AND/OR LARGER USE GRADE 60, EXCEPT FOR WALLS AND FRAME WALLS, REINFORCEMENT SHALL COMPLY WITH LOW ALLOY A 706.

5. STEEL REINFORCEMENT SHALL BE CLEAN AND FREE FROM LOOSE RUST, SCALE, DIRT AND ANY COATINGS THAT REDUCES CONCRETE BOND.

6. MINIMUM CONCRETE COVER SHALL BE PROVIDED FOR STEEL REINFORCEMENT AS FOLLOWS, U.O.N.: CONCRETE CAST AGAINST EARTH: 3" FORMED CONCRETE EXPOSED TO EARTH OR WEATHER 2" NOT EXPOSED TO EARTH OR WEATHER: 1 1/2"

7. PROVIDE 1/2"ø A.B. @ 60" O/C UNLESS NOTED OTHERWISE.

8. ELECTRICAL SERVICE SHALL BE BONDED TO COLD WATER PIPE & PROVIDE CONCRETE ENCASED ELECTRODE (UFER), #4 REBAR MIN. 20'

DESIGN-IT-RIGHT ARCHITECTS
456 BROWN STREET, SAN FRANCISCO CA
PH: (415) 356-9833 FAX 867-5309

SITE INFORMATION:
15555 JACKSON RD.
STOCKTON, CA

PROPOSED PROJECT FOR:
JOSEPH SAMPLE

DRAWNING DESCRIPTION
FOUNDATION PLAN

REVISION DATE	BY

DRAWN BY
M. ROGERS
DATE
FEB 2020
SCALE
1/4"=1'-0"
JOB NAME
SAMPLE
ACAD DWG
SAMPLE
SHEET NO
4
OF
12

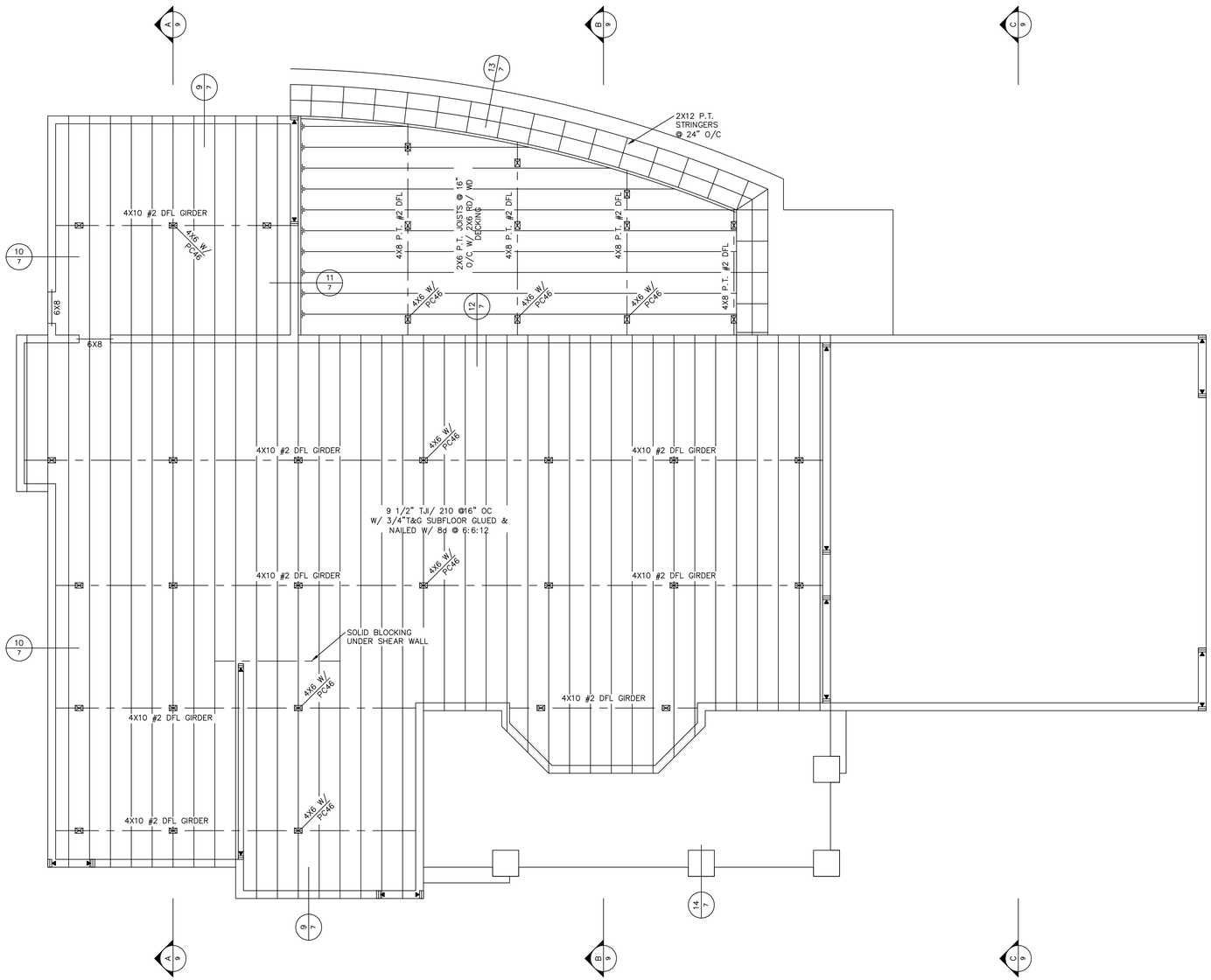

FLOOR FRAMING PLAN

1/4"=1'-0"

CARPENTRY: ALL FRAMING LUMBER SHALL BE DOUGLAS FIR-LARCH AS FOLLOWS UNLESS NOTED OTHERWISE:

A. STUDS: 2x4 STUDS-CONSTRUCTION, 2x6 STUDS DOUGLAS FIR-LARCH NO.2.

B. RAFTERS AND JOIST DOUGLAS FIR-LARCH NO.2.

C. PLATES, BLOCKS AND MISCELLANEOUS DOUGLAS FIR-LARCH NO.2.

D. POSTS: 4X CONCEALED-NO.2, 4X EXPOSED AND 6X DOUGLAS FIR-LARCH NO.1.

E. CONCEALED BEAMS DOUGLAS FIR-LARCH NO.1.

F. EXPOSED BEAMS DFL NO.1 APPEARANCE GRADE.

G. SHEATHING: ALL PLYWOOD TO CONFORM TO APA STANDARDS. SHEET USED IN THE CONSTRUCTION OF DIAPHRAGMS AND SHEAR WALLS SHALL BE NOT LESS THAN 4'X8'. MINIMUM SIZE SHEET AT BOUNDARIES AND CHANGES IN FRAMING SHALL BE 24", UNLESS BLOCKED. FRAMING MEMBERS OR BLOCKING AT ALL PANEL EDGES IN SHEAR WALLS.

H. SILL PLATES: FOUNDATION GRADE PRESSURE-TREATED DOUGLAS FIR-LARCH.

I. GLUE FOR GLUED FLOOR CONSTRUCTION: APA PERFORMANCE SPECIF. AFG-01

J. HANGERS AND CONNECTIONS: SIMPSON STRONG-TIE (AS NOTED ON DRAWINGS), UNITED STEEL PRODUCTS, OR APPROVED EQUAL.

K. FASTENERS/NAILING: AS NOTED ON DRAWINGS. IF NOT SHOWN ON DRAWINGS, NAILING OF FRAMING COMPONENTS SHALL CONFORM TO C.B.C. TABLE 2004.9.1 AS A MINIMUM. ALL NAILS SHALL BE COMMON WIRE GAUGE. IF POWER DRIVEN NAILS ARE TO BE USED, SUBMIT WIRE GAUGE, LENGTH AND HEAD DIAMETER FOR REVIEW, IF NOT EQUAL TO COMMON WIRE SPECS. FLOOR PLYWOOD TO BE ATTACHED WITH RING-SHANK NAILS OR ADHERED TO SUPPORTING MEMBERS W/ CONTACT ADHESIVE PRIOR TO NAILING. ALL FASTENERS/NAILS FOR FOUNDATION PRESSURE-PRESERVATIVE TREATED WOOD SHALL BE OF HOT-DIPPED ZINC COATED GALVANIZED, STAINLESS STEEL, SILICON BRONZE OR COPPER.

L. ALL EXPOSED DECKING, JOISTS, AND POSTS SHALL BE PRESSURE TREATED OR ROT RESISTANT LUMBER OR PRIMED AND PAINTED PRIOR TO ASSEMBLY.

FLOOR FRAMING NOTES:
1. PROVIDE MIN 1SF OF UNDER FLOOR VENT PER 150SF OF FLOOR AREA PER CBC SEC. 1203.3.1

CALCULATION: 1751SF / 150 =11.67SF NET FREE VENT

DESIGN-IT-RIGHT ARCHITECTS
456 BROWN STREET, SAN FRANCISCO CA
PH: (415) 356-9833 FAX 867-5309

SITE INFORMATION:
15555 JACKSON RD.
STOCKTON, CA

PROPOSED PROJECT FOR:
JOSEPH SAMPLE

DRAWNING DESCRIPTION
FLOOR FRAMING PLAN

REVISION DATE	BY

DRAWN BY
M. ROGERS
DATE
FEB 2020
SCALE
1/4"=1'-0"
JOB NAME
SAMPLE
ACAD DWG
SAMPLE
SHEET NO
5
OF
12

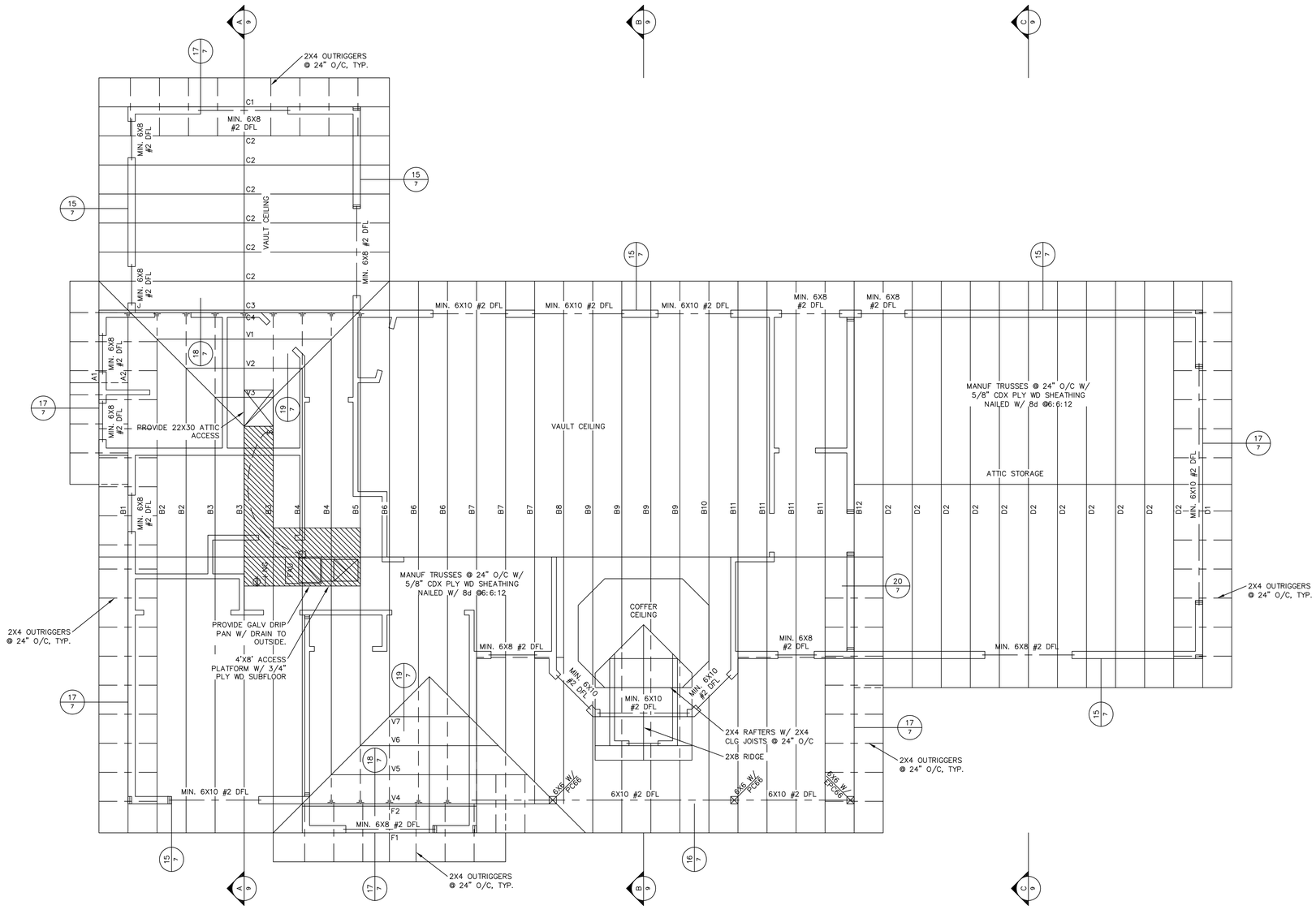

ROOF FRAMING PLAN

1/4"=1'-0"

ROOF FRAMING NOTES

1 ROOF COVERING SHALL BE CLASS "A" COMP SHINGLE ROOFING OVER MIN 15# FELT & 1/2" CDX SHEATHING (OR EQUIV.) W/CLIPS

2 MANUFACTURED TRUSSES @24" OC , ENGINEERING SHALL BE PROVIDED BY MANUFACTURER.

3 2X4 OUTRIGGERS @ 24" OC TYP UNLESS NOTED OTHERWISE.

4 ALL BEAMS SHALL BE #2 OR BETTER

5 ROOF SHEETING SHALL BE NAILED W/ 8d @6" OC EDGE & BOUNDRIES & 8d @12" OC FIELD TYPICAL

6. APPROVED TRUSS DRAWINGS MUST BE ON JOB SITE FOR INSPECTION PURPOSES

7. PROVIDE CONTINUOUS PLY WD UNDER ALL CALIFORNIA FILLS

8. ALL OPENINGS & SPACES BETWEEN THE ROOF COVERING & ROOF DECK SHALL BE CONSTRUCTED TO PREVENT THE INTRUSION OF FLAMES & EMBERS, BE FIRESTOPPED W/ APPROVED MATERIALS OR HAVE ONE LAYER OF NO. 72 ASTM CAP SHEET OVER COMBUSTABLE DECKING.

9. ROOF GUTTERS SHALL BE PROVIDED W/ A COVERING TO PREVENT ACCUMULATION OF LEAVES AND DEBRIS.

10. ALL ROOF & ATTIC VENTS SHALL RESIST THE INTRUSION OF FLAME & EMBERS INTO ATTIC AREA, OR SHALL BE PROTECTED BY CORROSION-RESISTANT, NONCOMBUSTABLE WIRE MESH W/ 1/4" (6MM) OPENINGS OR EQUAL.

11. NO EAVE & CORNICE VENTS SHALL BE INSTALLED UNLESS OTHERWISE APPROVED BY THE BUILDING DEPT.

12. ALL EAVES SHALL BE PROTECTED BY IGNITION RESISTANT MATERIAL OR NONCOMBUSTABLE CONSTRUCTION ON THE EXPOSED SIDE

A. ALL RAFTER TAILS SHALL BE MIN. 2X SOLID WOOD FRAMING, OR BE FIRE TREATED

B. ALL SHEATHING THAT IS EXPOSED AT EAVES SHALL BE FIRE TREATED.

C. ALL FACIA MATERIAL SHALL BE MIN. 2X SOLID WOOD FRAMING, OR BE FIRE TREATED

PROVIDE MIN 1SF OF ATTIC VENT PER 150SF OF FLOOR AREA PER CBC SEC. 1203.2

CALCULATION: 2544SF / 150 =16.96SF NET FREE VENT

MINIMUM OF 50 PERCENT OF THE VENTS MUST BE LOCATED IN THE UPPER PORTION OF THE SPACE BEING VENTILATED AT LEAST 3 FEET ABOVE EAVE OR CORNICE VENTS

DESIGN-IT-RIGHT ARCHITECTS
456 BROWN STREET, SAN FRANCISCO CA
PH: (415) 356-9833 FAX 867-5309

SITE INFORMATION:
15555 JACKSON RD.
STOCKTON, CA

PROPOSED PROJECT FOR:
JOSEPH SAMPLE

DRAWNING DESCRIPTION
ROOF FRAMING PLAN & NOTES

REVISION DATE	BY

DRAWN BY
M. ROGERS
DATE
FEB 2020
SCALE
1/4"=1'-0"
JOB NAME
SAMPLE
ACAD DWG
SAMPLE
SHEET NO
6
OF
12

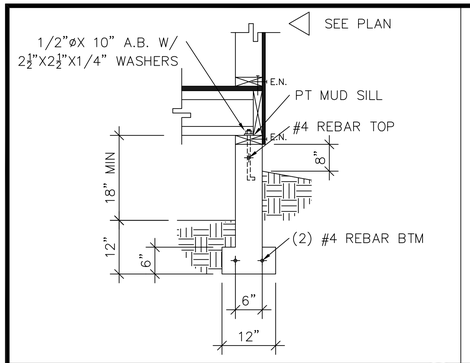

1/7

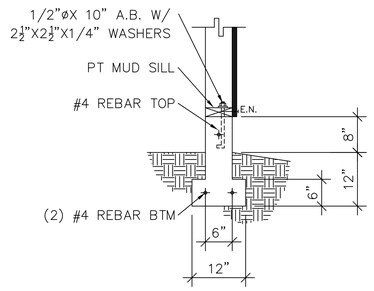

2/7

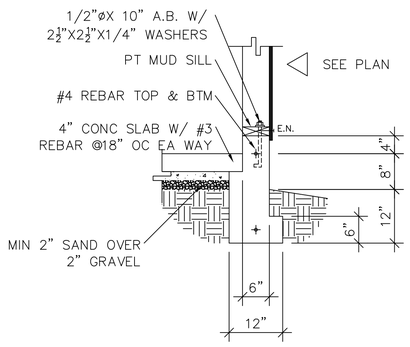

3/7

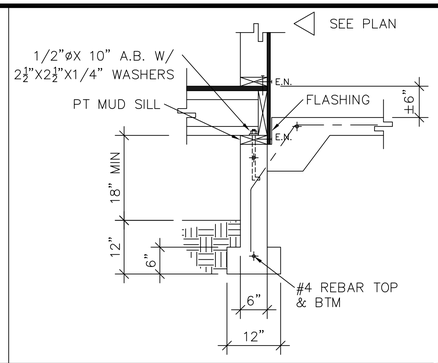

4/7

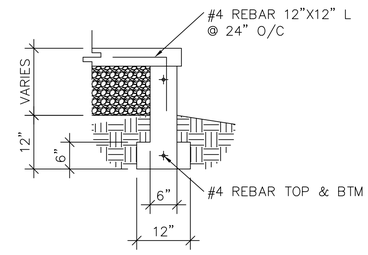

5/7

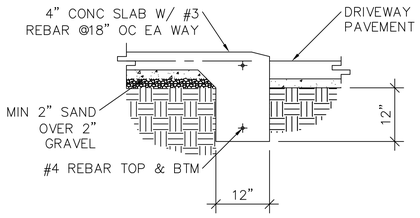

6/7

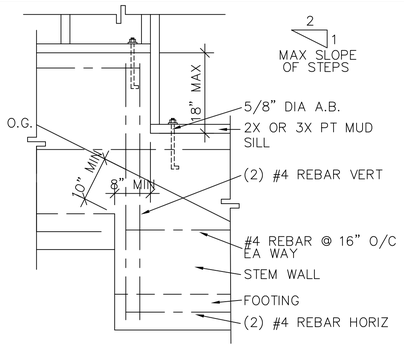

7/7

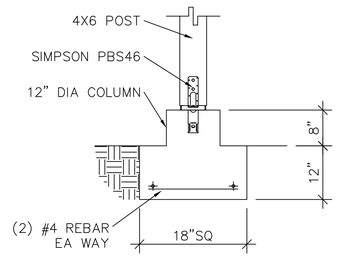

8/7

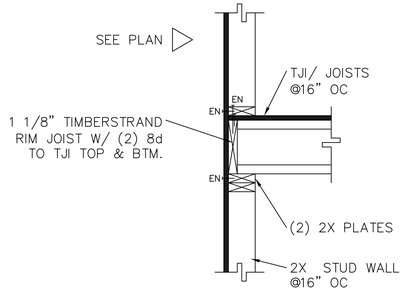

9/7

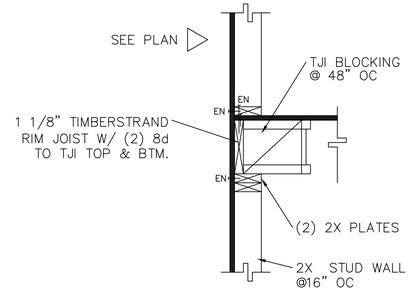

10/7

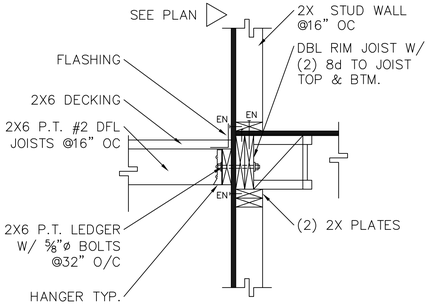

11/7

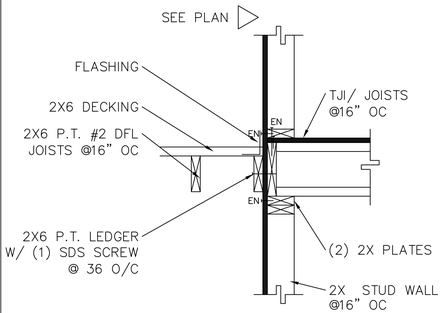

12/7

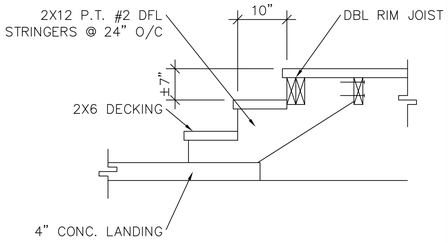

13/7

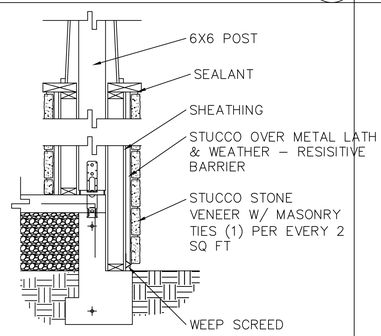

14/7

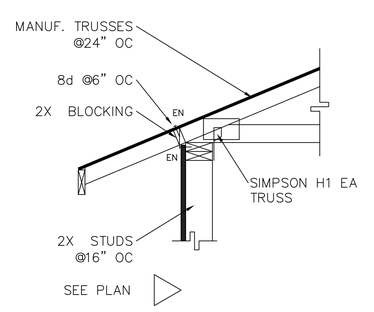

15/7

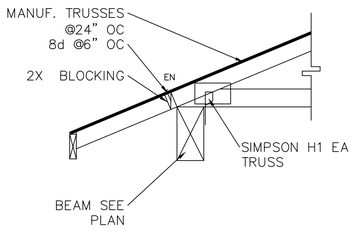

16/7

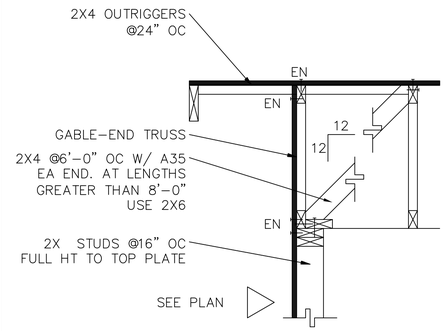

17/7

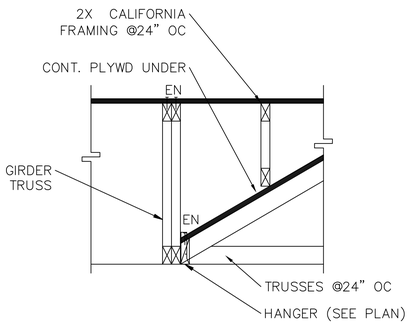

18/7

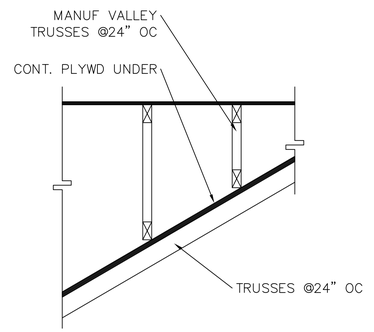

19/7

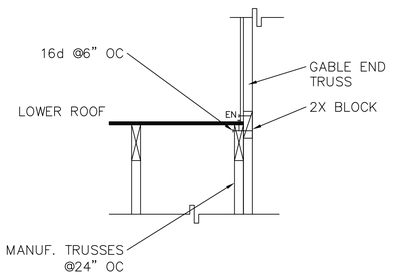

20/7

DESIGN–IT–RIGHT ARCHITECTS
456 BROWN STREET, SAN FRANCISCO CA
PH: (415) 356–9833 FAX 867–5309

SITE INFORMATION:
15555 JACKSON RD.
STOCKTON, CA

PROPOSED PROJECT FOR:
JOSEPH SAMPLE

DRAWNING DESCRIPTION
DETAILS

REVISION DATE	BY

DRAWN BY
M. ROGERS
DATE
FEB 2020
SCALE
1/4"=1'–0"
JOB NAME
SAMPLE
ACAD DWG
SAMPLE
SHEET NO
7
OF
12

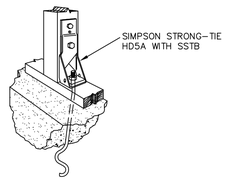

TYPICAL HOLDOWN

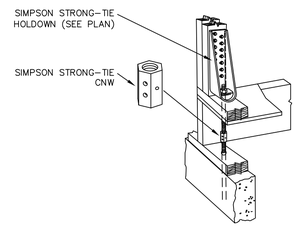

ALTERNATE HOLDOWN

AS OCCURS

SHEAR WALL SCHEDULE

TYPE	SILL/SHEATHING/FRAMING	SHEATHING FASTENER	EDGE FSTNR	FIELD FSTNR	ALLOW. LOAD	FLOOR BASE ANCHOR
2X FRAMING MEMBERS						
A	2x SILL PLATE ⅜" PLYWOOD C-C, C-D SHEATHING, PLYWOOD PANEL SIDING AND OTHER GRADES COVERED IN UBC STANDARD 23-2 OR 23-3	8d COMMON	6" o.c.	12" o.c.	260 plf	3-16d NAILS @ 16" o.c. (SILL TO SUBFLOOR) OR ½"x 10" ANCHOR BOLTS @ 3'-6" o.c. (SILL TO FOUNDATION)
B		8d COMMON	4" o.c.	12" o.c.	350 plf	3-16d NAILS @ 12" o.c. (SILL TO SUBFLOOR) OR ½"x 10" ANCHOR BOLTS @ 2'-6" o.c. (SILL TO FOUNDATION)
C	½" GYPSUM WALLBOARD	6d COOLER NAILS	7" o.c.	7" o.c.	100 plf	3-16d NAILS @ 16" o.c. (SILL TO SUBFLOOR) OR ½"x 10" ANCHOR BOLTS @ 6' o.c. (SILL TO FOUNDATION)
3X FRAMING MEMBERS (@ ALL PANEL BREAKS AND EDGES)						
D	3x SILL PLATE ⅜" PLYWOOD C-C, C-D SHEATHING, PLYWOOD PANEL SIDING AND OTHER GRADES COVERED IN UBC STANDARD 23-2 OR 23-3	10d COMMON	4" o.c.	12" o.c.	460 plf	SDS ¼"x 6" SCREWS @ 8"o.c. (SILL TO SUBFLOOR) OR ⅝"x 10" ANCHOR BOLTS @ 3'-6"o.c. (SILL TO FOUNDATION)
E		10d COMMON	3" o.c.	12" o.c.	600 plf	SDS ¼"x 6" SCREWS @ 6"o.c. (SILL TO SUBFLOOR) OR ⅝"x 10" ANCHOR BOLTS @ 3'o.c. (SILL TO FOUNDATION)
F		10d COMMON	2" o.c.	12" o.c.	770 plf	SDS ¼"x 6" SCREWS @ 6"o.c. (SILL TO SUBFLOOR) OR ⅝"x 10" ANCHOR BOLTS @ 2'-0"o.c. (SILL TO FOUNDATION)
G	3x SILL PLATE 1⅜" PLYWOOD C-C, C-D SHEATHING, PLYWOOD PANEL SIDING AND OTHER GRADES COVERED IN UBC STANDARD 23-2 OR 23-3 BOTH SIDES.	10d COMMON	4" o.c.	12" o.c.	920 plf	SDS ¼"x 6" SCREWS @ 4"o.c. (SILL TO SUBFLOOR) OR ⅝"x 10" ANCHOR BOLTS @ 18"o.c. (SILL TO FOUNDATION)
H		10d COMMON	3" o.c.	12" o.c.	1200 plf	SDS ¼"x 6" SCREWS @ 3"o.c. (SILL TO SUBFLOOR) OR ⅝"x 10" ANCHOR BOLTS @ 18"o.c. (SILL TO FOUNDATION)
S18	SIMPSON WOOD STRONG WALL SW18x9				1040#	STRONG WALL ANCHOR BOLT TEMPLATE
S24	SIMPSON WOOD STRONG WALL SW18x9				1525#	STRONG WALL ANCHOR BOLT TEMPLATE

NOTES: 1. WHERE WOOD PANELS ARE APPLIED ON BOTH FACES OF WALL AND NAIL SPACING IS LESS THAN 6"o.c. ON EITHER SIDE, PANEL JOINTS SHALL BE OFFSET TO FALL ON DIFFERENT FRAMING MEMBERS OR FRAMING SHALL BE 3-INCH NOMINAL OR THICKER AND NAILS ON EACH SIDE SHALL BE STAGGERED.
2. WHERE ALLOWABLE SHEAR VALUES EXCEED 350 POUNDS PER FOOT FOUNDATION SILL PLATES AND ALL FRAMING MEMBERS RECIEVING EDGE NAILING ABUTTING PANELS SHALL NOT LESS THAN A SINGLE 3-INCH NOMINAL MEMBER AND FOUNDATION SILL PLATES SHALL NOT BE LESS THAN 3-INCH NOMINAL.
3. FRAMING MEMBERS AND BLOCKING SHALL BE PROVIDED AT THE EDGES OF ALL SHEETS IN SHEAR WALLS.
4. JOIST OR BLOCKING SHALL BE PROVIDED UNDER SHEAR WALL IS ORDER TO PROVIDE ADEQUATE SILL ATTACHMENT.
5. DOUBLE 2X MEMBERS NAILED TOGETHER WITH 10d @ 6"o.c. STAGGERED, ARE AN ACCEPTABLE ALTERNATE FOR 3X MEMBERS AT VERTICAL PANEL EDGES.
6. IN SEISMIC DESIGN CATEGORIES D, E, AND F ANCHOR BOLTS FOR SHEAR WALLS SHALL INCLUDE STEEL PLATE WASHERS, A MINIMUM OF 0.229 INCH BY 3 INCHES BY 3 INCHES IN SIZE BETWEEN SILL PLATE AND NUT. (CBC 2007 SEC. 2305.3.11)

HOLDOWN/STRAP SCHEDULE

HOLDOWN #	MODEL #	VERTICAL FRAMING MEMBER	ANCHOR	ALLOWABLE
2	SIMPSON HD2A	DOUBLE 2x 6 DFL. No. 2	SSTB16	2775
5	SIMPSON HD5A	4x 6 DFL. No. 2 OR 3-2x 6 DFL. No. 2	SSTB16	4010
6	SIMPSON HD6A	4x 6 DFL. No. 2 OR 3-2x 6 DFL. No. 2	SSTB28	5105
8	SIMPSON HD8A	6x 6 DFL. No. 2	SSTB28	7910
10	SIMPSON HD10A	6x 6 DFL. No. 2	SSTB28	9900
14	SIMPSON HD14A	6x 6 DFL. No. 2	1"ø ASTM 307 OR A36 STEEL ANCHOR SEE NOTE #6	13380
STRAP #	MODEL #	VERTICAL FRAMING MEMBER	ATTACHMENT	
28	SIMPSON MSTC28	DOUBLE 2x 6 DFL. No. 2	16- 16d SINKERS	1335
40	SIMPSON MSTC40	DOUBLE 2x 6 DFL. No. 2	36- 16d SINKERS	3000
66	SIMPSON MSTC66	4x 6 DFL. No. 2	68- 16d SINKERS	5660
12	SIMPSON CMST12	6x 6 DFL. No. 2	86- 16d SINKERS	9235
B3	SIMPSON MSTC48B3	DOUBLE 2X6 DFL. No. 2	38- 10d SINKERS	3930

NOTES: 1. WHERE BUILD UP WALLS EXIST BELOW STRUCTURE THE FOLLOWING STRAPS MAY BE SUBSTITUTED FOR SPECIFIED ANCHORS IN MAIN WALL TO BUILD UP WALL CONNECTIONS WITH SPECIFIED ANCHOR CONNECTION TO FOUNDATION.

40 → 2
66 → 6
12 → 8 – 88" LENGTH + CLEAR SPAN

2. HOLDOWNS AND STRAPS SHALL BE CONTINUOUS TO FOUNDATION.

ACCEPTABLE ALTERNATE HOLDOWNS:
2 – PHD2-SDS3
5 – PHD5-SDS3, ANCHOR – SSTB20
6 – PHD6-SDS3
8 – HDQ8-SDS3
UNLESS OTHERWISE INDICATED ANCHORS AND VERTICAL MEMBERS ARE THE SAME AS THE HD'S BEING REPLACED.
3. TENSION MEMBERS SHALL BE CONSTRUCTED TO PROVIDE CONTINUOUS LOAD TRANSFER TO FOUNDATION.
4. FOOTING DEPTHS MAY HAVE TO BE INCREASED TO ACCOMODATE HOLDDOWN ANCHORS.
5. DOUBLE OR TRIPLE VERTICAL FRAMING MEMBERS TO BE NAILED TOGETHER WITH 10d @ 6"o.c., BOTH SIDES WHERE APPLICABLE.
6. ANCHOR WITH NUT/WASHER/NUT ATTACHMENT AT BASE AS SHOWN IN 2008 SIMPSON CATALOG ON PAGE 27. MINIMUM 18" EMBEDMENT WITH 3" OF COVER BELOW.

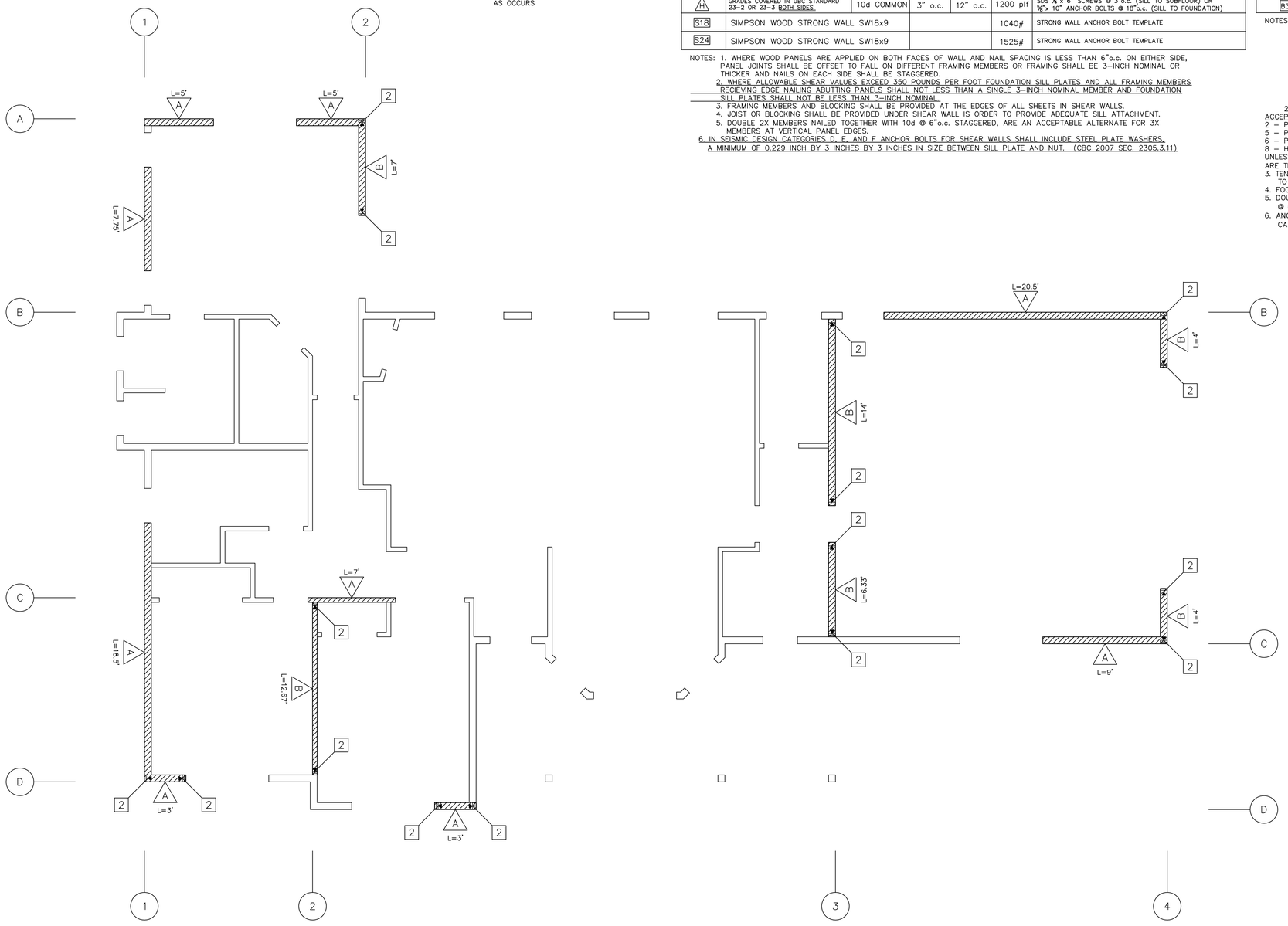

SHEARWALL PLAN

1/4"=1'-0"

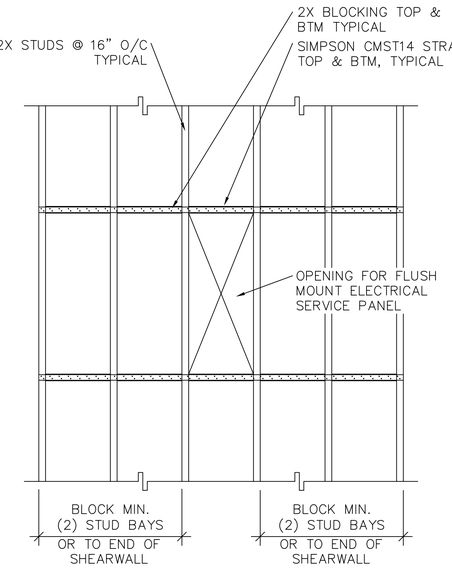

SERVICE PANEL/SHEARWALL DETAIL

AS OCCURS

DESIGN-IT-RIGHT ARCHITECTS
456 BROWN STREET, SAN FRANCISCO CA.
PH: (415) 356-9833 FAX 867-5309

SITE INFORMATION:
15555 JACKSON RD.
STOCKTON, CA

PROPOSED PROJECT FOR:
JOSEPH SAMPLE

DRAWNING DESCRIPTION
SHEARWALL PLAN, DETAILS & NOTES

REVISION DATE	BY

DRAWN BY
M. ROGERS
DATE
FEB 2020
SCALE
1/4"=1'-0"
JOB NAME
SAMPLE
ACAD DWG
SAMPLE
SHEET NO
8
OF 12

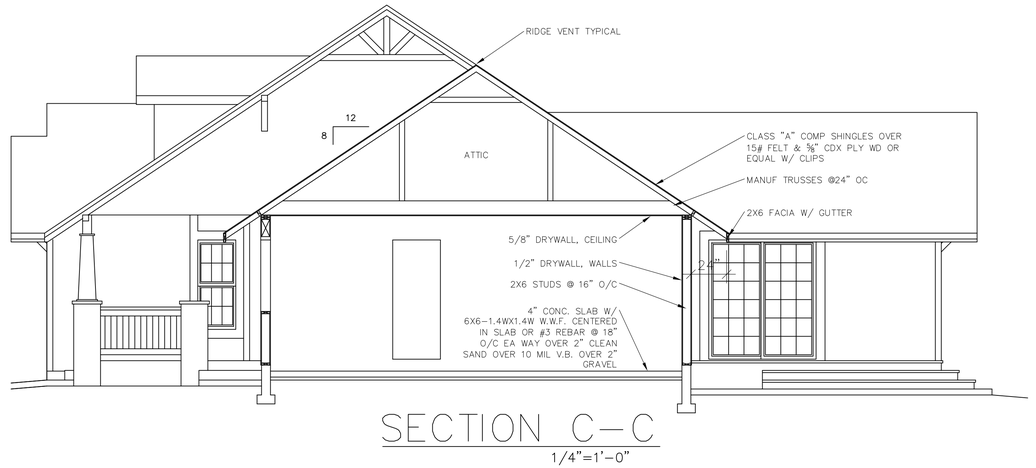

SECTION C—C

1/4"=1'-0"

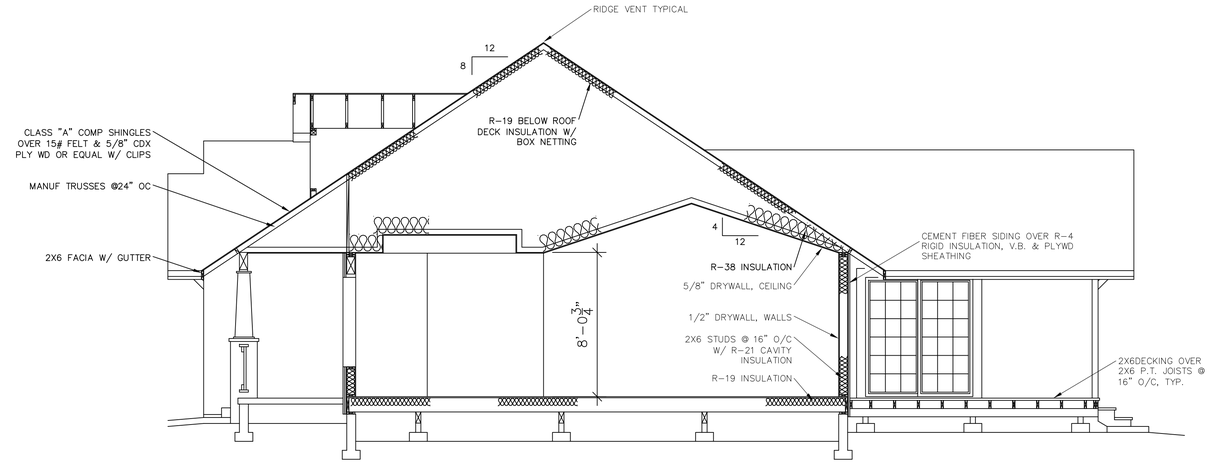

SECTION B—B

1/4"=1'-0"

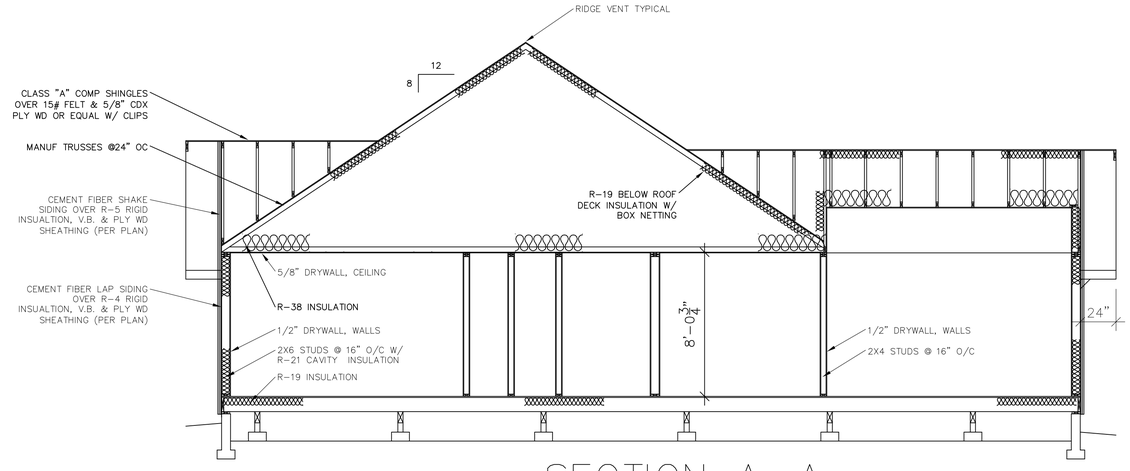

SECTION A—A

1/4"=1'-0"

DESIGN—IT—RIGHT
ARCHITECTS
456 BROWN STREET, SAN FRANCISCO CA.
PH: (415) 356-9833 FAX 867-5309

SITE INFORMATION:
15555 JACKSON RD.
STOCKTON, CA

PROPOSED PROJECT FOR:
JOSEPH SAMPLE

DRAWNING DESCRIPTION
SECTIONS

REVISION DATE	BY

DRAWN BY
M. ROGERS
DATE
FEB 2020
SCALE
1/4"=1'-0"
JOB NAME
SAMPLE
ACAD DWG
SAMPLE
SHEET NO
9
OF
12

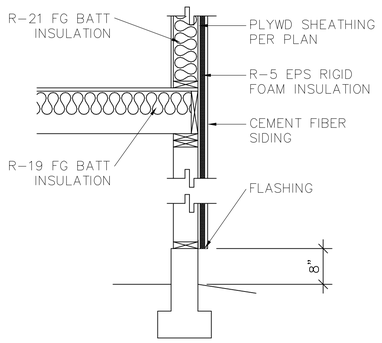

INSULATION AT FLOOR/WALL 3/4"=1'-0" — 1/10

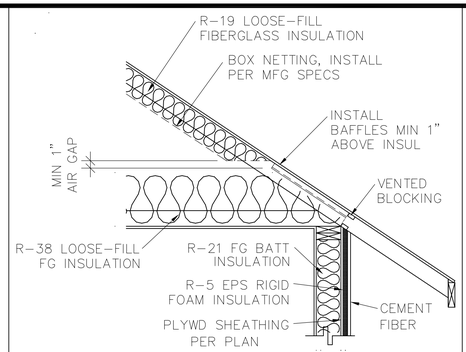

ROOF INSULATION AT WALL/ROOF 3/4"=1'-0" — 5/10

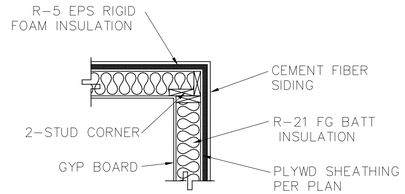

INSULATION @ WALL CORNER 3/4"=1'-0" — 9/10

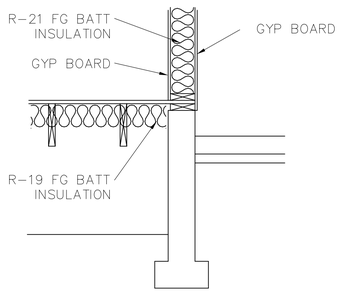

INSULATION AT HOUSE/GARAGE 3/4"=1'-0" — 2/10

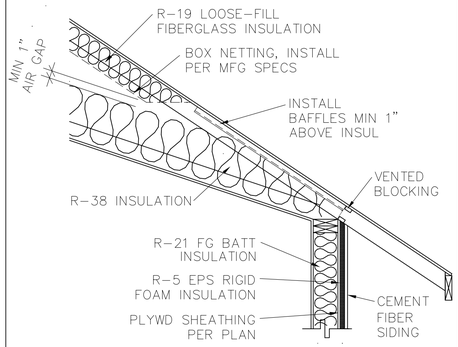

ROOF INSULATION AT VAULT 3/4"=1'-0" — 6/10

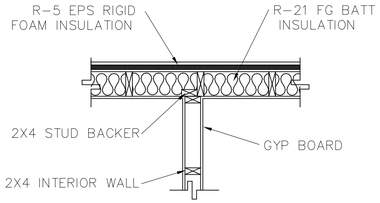

INSULATION @ INTERIOR WALL 3/4"=1'-0" — 10/10

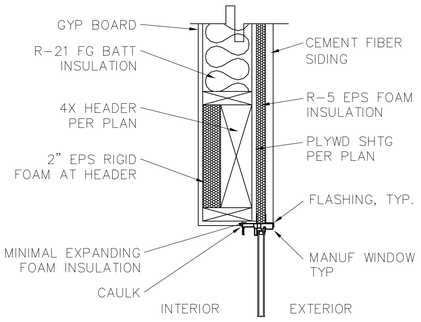

INSULATION AT HEADERS 1 1/2"=1'-0" — 3/10

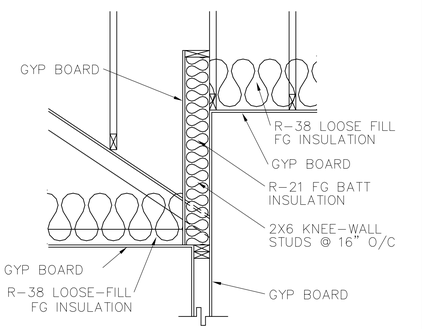

INSULATION AT KNEE WALL 3/4"=1'-0" — 7/10

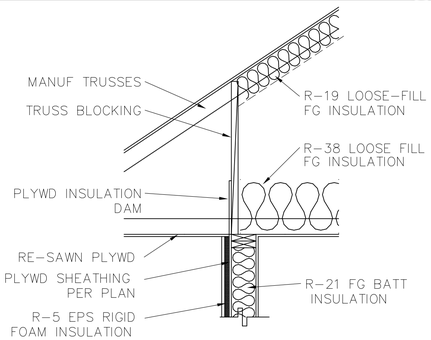

INSULATION @ PORCH 3/4"=1'-0" — 11/10

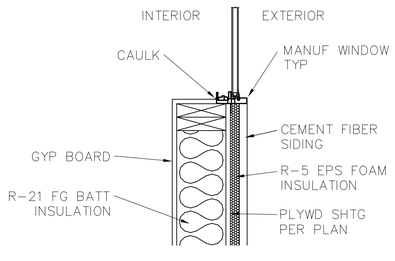

INSULATION AT WINDOWS 1 1/2"=1'-0" — 4/10

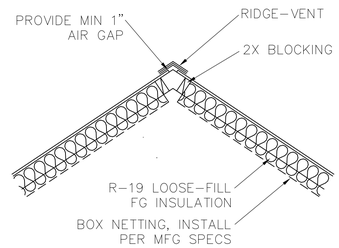

ROOF INSULATION AT RIDGE 3/4"=1'-0" — 8/10

QII Schedule on Site

Timing for QII Tasks	Task
Establishing Sub's for project	Engage HERS rater *early* to have them review plans and schedule inspections
Framing Stage	Air barrier inspection (before ANY INSULATION installed)
Insulation Installation	Roof, walls and floors insulation installation must be inspected before closing up building feature (BEFORE finishing)
Final for Occupancy Permit	Final paperwork (CF2R and CF3R's) coordinated for final inspection by Building Inspector.

QII Note Block

Common Thermal Specifications

- ☐ Materials shall comply with, and be installed in conformance with, all applicable building codes for building. California Building Code (including, but not limited to, California Electric Code Section 719) and installed to meet all applicable fire codes.
- ☐ Materials shall meet California Quality Standards for Insulating Material, Title 24, Part 12, Chapter 4, Article 3, listed in the California Department of Consumer Affairs Consumer Guide and Directory of Certified Insulating Materials.
- ☐ Materials shall comply with flame spread rating and smoke density requirements of Chapter 26 and Section 706 of the Title 24, Part 2: all installations with exposed facings must use fire retardant facings which have been tested and certified not to exceed a flame spread of 25 and a smoke development rating of 450. Insulation facings that do not touch a ceiling, wall, or floor surface, and faced batts on the undersides of roofs with an air space between the ceiling and facing are considered exposed applications.
- ☐ Materials shall be installed according to manufacturer specifications and instructions.
- ☐ Hard covers or draft stops shall be placed over all drop ceiling areas and interior wall cavities to keep insulation in place and stop air movement. If hard covers or draft stops are missing or incomplete, they shall be completed before insulation is installed.
- ☐ Required eave ventilation shall not be obstructed - the net free-ventilation area of the eave vent shall be maintained.
- ☐ Eave vent baffles shall be installed to prevent air movement under or into the batt.
- ☐ Insulation shall cover all recessed lighting fixtures. If the fixtures are not rated for insulation cover (IC) and air tight, the fixtures shall be replaced. All recessed light fixtures that penetrate the ceiling shall be listed for zero clearance insulation contact (IC), have a label that certifies it as airtight with leakage less than 2.0 cfm @ 75 Pa when tested to ASTM E283, and shall be sealed with a gasket or caulk between the light's housing and the ceiling.
- ☐ Insulation shall be installed so that they will be in contact with the air barrier.
- ☐ Insulation shall fill the cavity. Sized to fit, no compression, fill voids etc.

R-Value Measurement

- ☐ The HERS rater shall verify the installed thickness of insulation in all assemblies and locations on walls, roof/ceilings, and floors, and to ensure that insulation levels and installation integrity meet the R-value specified on the Certificate of Compliance, and all other required compliance documentation.

Walls

- ☐ Bottom plates of framed and non-framed and other wall type assemblies shall be sealed to the ground subfloor or slab, and above ground subfloor.
- ☐ Wall stud cavities shall be caulked or foamed to provide a substantially air-tight envelope to the outdoors, attic, garage and crawl space. All plumbing and wiring penetrations through the top and bottom plates and electrical boxes that penetrate the sheathing shall be sealed. All gaps in the air barrier shall be caulked, taped, or sealed with minimally expansive foam.

Windows

- ☐ All gaps around windows and doors are sealed. The sealant used follows window manufacturer specifications. Coordinate between trades who is responsible.

Rim-Joists

- ☐ All rim-joists shall be insulated to the same R-Value as the adjacent walls.

Kneewalls, Skylight Shafts, and Gable Ends

- ☐ Framing for kneewalls, skylight shafts and gable ends that separate conditioned from unconditioned space shall be insulated to meet or exceed the wall R-value specified on the Certificate of Compliance, and all other required compliance documentation.

DESIGN-IT-RIGHT ARCHITECTS
456 BROWN STREET, SAN FRANCISCO CA
PH: (415) 356-9833 FAX 867-5309

SITE INFORMATION:
15555 JACKSON RD.
STOCKTON, CA

PROPOSED PROJECT FOR:
JOSEPH SAMPLE

DRAWING DESCRIPTION
SECTIONS

REVISION DATE	BY

DRAWN BY: M. ROGERS
DATE: FEB 2020
SCALE: 1/4"=1'-0"
JOB NAME: SAMPLE
ACAD DWG: SAMPLE
SHEET NO: 10
OF 12

TABLE 150.0-A

High Efficacy Light Sources Luminaires installed with only the lighting technologies in this table shall be classified as high efficacy	
Light sources in this column other than those installed in ceiling recessed downlight luminaires are classified as high efficacy and are not required to comply with Reference Joint Appendix JA8	Light sources in this column shall be certified to the Commission as High Efficacy Light Sources in accordance with Reference Joint Appendix JA8 and be marked as meeting JA8.
1. Pin-based linear or compact fluorescent light sources using electronic ballasts. 2. Pulse-start metal halide. 3. High pressure sodium. 4. GU-24 sockets containing light sources other than LEDs. [a,b] 5. Luminaires with hardwired high frequency generator and induction lamp. 6. Inseparable SSL luminaires that are installed outdoors. 7. Inseparable SSL luminaires containing colored light sources that are installed to provide decorative lighting.	8. All light sources in ceiling recessed downlight luminaires. Note that ceiling recessed downlight luminaires shall not have screw bases regardless of lamp type as described in Section 150.0(k)1C 9. GU-24 sockets containing LED light sources. 10. Any light source not otherwise listed in this table and certified to the Commission as complying with Joint Appendix 8.
Notes: a. GU-24 sockets containing light sources such as compact fluorescent lamps and induction lamps. b. California Title 20 Section 1605(k)3 does not allow incandescent sources to have a GU-24 base.	

ELECTRICAL SCHEDULE

$	SINGLE POLE SWITCH
$3	3 WAY SWITCH
$D	DIMMER SWITCH
$V	MANUAL ON VACANCY SENSOR
⊖	110 V OUTLET
⊖	220 V OUTLET
GFI ⊖	GROUND FAULT INTERUPTER
WP ⊖	WATER PROOF OUTLET
⊡	SURFACE MOUNT FIXTURE
⊡	RECESSED FIXTURE (JA8-2016)
FLR	LINEAR FLOURESCENT FIXTURE
MD	MOTION DETECTOR W/ PHOTOCELL
SA	SMOKE ALARM
CO	CARBON MONOXIDE ALARM
SP	SERVICE PANEL 200 AMP
▷	TELEVISION JACK
⌀	TELEPHONE JACK
⊞	EXHAUST FAN
—NG	NATURAL GAS

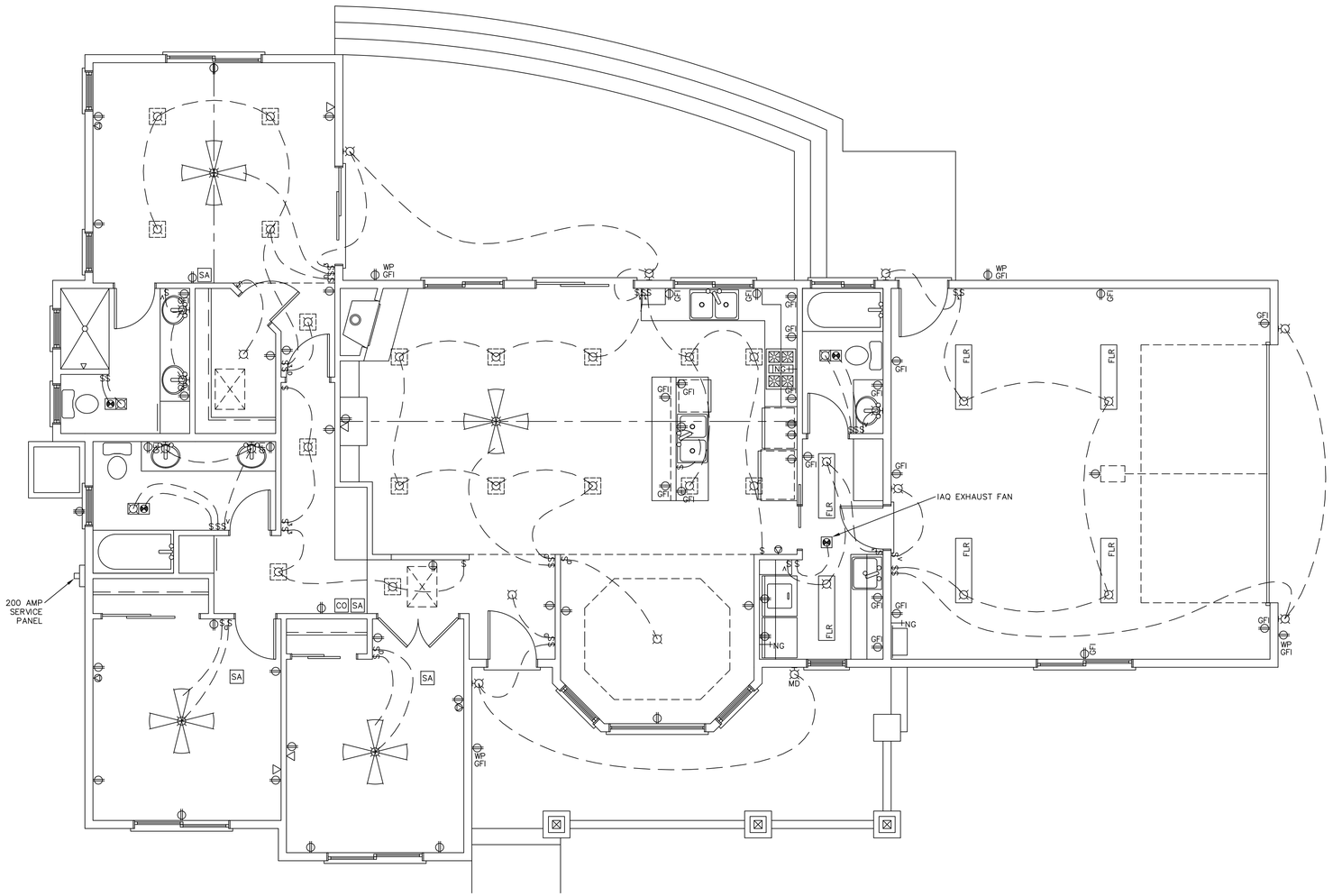

MAIN ELECTRICAL PLAN

1/4"=1'-0"

ENERGY CODE NOTES

1. ALL LIGHTING MUST BE HIGH EFFICACY PER TABLE 150.0-A BELOW
2. ALL LIGHTING THAT QUALIFIES AS HIGH EFFICACY PER JA8 MUST BE CONTROLLED BY A DIMMER OR VACANCY SENSOR
3. ALL RECESSED LIGHTS MUST BE AIR TIGHT, IC RATED AND CERTIFIED JA8-2016, OR JA8-2016-E FOR ELEVATED TEMPERATURE AND CONTROLLED BY A DIMMER OR VACANCY SENSOR
4. AT LEAST ONE LIGHT LOCATED IN A BATHROOM, LAUNDRY ROOM, UTILITY ROOM AND GARAGE MUST BE CONTROLLED BY A VACANCY SENSOR
5. BLANK ELECTRICAL BOXES >5' ABOVE THE FLOOR MUST BE CONTROLLED BY A DIMMER, VACANCY SENSOR OR FAN CONTROL SWITCH. THE QUANTITY OF BLANK ELECTRICAL BOXES IS LIMITED TO NO MORE THAN THE NUMBER OF BEDROOMS
6. EXHAUST FANS SHALL BE SWITCHED SEPARATELY FROM LIGHTING
7. ALL OUTDOOR LIGHTING PERMANENTLY ATTACHED TO THE BUILDING MUST BE HIGH EFFICACY PER TABLE 150.0-A BELOW AND CONTROLLED BY A MANUAL ON-OFF SWITCH, MOTION CONTROL AND PHOTOCONTROL
8. LUMINATED ADDRESS SIGN SHALL BE 5 WATTS OR LESS

ELECTRICAL NOTES

1. ELECTRICAL SERVICE SHALL BE BONDED TO COLD WATER PIPE & PROVIDE CONCRETE ENCASED ELECTRODE (UFER), #4 REBAR MIN. 20'.
2. ALL HOSE BIBS SHALL BE EQUIPPED W/ NON-REMOVABLE BACK-FLO PREVENTION DEVICES AND SHALL BE FREEZE PROOF.
3. ALL AIR CONDITIONING EQUIPMENT DESIGNED TO BE IN A FIXED POSITION SHALL BE SECURELY FASTENED.
4. NO PART OF CORD CONNECTED FIXTURES, HANGING FIXTURES, TRACK LIGHTING, PENDANTS OR CEILING FANS SHALL BE LOCATED DIRECTLY ABOVE THE TUB AND IN A ZONE MEASURED 3' HORIZONTALLY AND 8' VERTICALLY FROM THE BATH TUB RIM.
5. LIGHTING FIXTURES IN CLOTHES CLOSETS SHALL COMPLY WITH N.E.C. SECTION 410-8.
6. PROVIDE AFCI (ARC-FAULT CIRCUIT INTERRUPTER) COMBINATION TYPE PROTECTION FOR ALL BEDROOMS PER 2007 CEC SECTION 210-12(B).
7. PROVIDE AT LEAST ONE (1) 20 AMP BRANCH CIRCUIT FOR BATHROOM OUTLETS WITH NO ADDITIONAL OUTLETS CONNECTED PER 2010 CEC SECTION 210-11C(3). PROVIDE (2) OR MORE 20 AMP BRANCH CIRCUITS EVENLY PROPORTIONED IN THE KITCHEN AREA PER CEC220.4(B) & 210.52(B). PROVIDE (1) 20 AMP BRANCH CIRCUIT FOR THE LAUNDRY AREA PER CEC 210.11C(2)
8. ALL FAN LIGHTS TO HAVE SEPARATE SWITCHES & #35 METAL BOX
9. LOCAL EXHAUST BATHROOM FANS SHALL BE ENERGY STAR COMPLIANT & DUCTED DIRECTLY TO THE OUTSIDE OF THE BUILDING. PROVIDE MIN 50 CFM LOCAL EXHAUST FAN IN EACH BATHROOM W/ MAX 3 SONE RATING
10. WHOLE HOUSE VENTILATION FAN MEETING ASHRAE 62.2 MECHANICAL VENTILATION REQUIREMENTS MUST BE SWITCHED SEPARATELY AND LABELED "INDOOR AIR QUALITY FAN MUST REMAIN ON WHILE HOME IS OCCUPIED". PROVIDE MIN 47.5 CFM FAN W/ MAX 1 SONE RATING
11. HUMIDISTAT CONTROLS SHALL BE CAPABLE OF ADJUSTMENT BETWEEN A RELATIVE HUMIDITY RANGE OF 50% AND 80%
12. LOCAL EXHAUST KITCHEN EXHAUST FAN SHALL HAVE A BACKDRAFT DAMPER & BE DUCTED DIRECTLY TO THE OUTSIDE OF THE BUILDING. PROVIDE MIN 100 CFM EXHAUST FAN W/ MAX 3 SONE RATING
13. PROVIDE SMOKE DETECTOR IN EACH SLEEPING ROOM, OUTSIDE EACH SLEEPING AREA, LIVING AREA ON EACH ADDITIONAL STORY OF THE DWELLING. SMOKE DETECTOR TO HAVE PERMANENT WIRING & 3' CLEARANCE FROM RETURN AIR. INSTALL PER MANUFACTURE'S REQ. THE ALARM SHALL BE INTERCONNECTED IN SUCH A MANNER THAT THE ACTIVATION OF ONE ALARM WILL ACTIVATE ALL OF THE ALARMS IN THE INDIVIDUAL UNIT.
14. SMOKE ALARMS SHALL BE INSTALLED, TESTED & MAINTAINED IN ACCORDANCE W/ MANUFACTURER'S INSTRUCTIONS. SMOKE ALARMS INSTALLED IN ONE & TWO FAMILY DWELLINGS SHALL BE REPLACED AFTER 10 YEARS FROM THE DATE OF MANUFACTURE 907.2.11.2.3
15. PROVIDE CARBON MONOXIDE ALARM FOR NEW CONSTRUCTION DWELLING UNITS & IN SLEEPING UNITS WITHIN WHICH FUEL BURNING APPLIANCES ARE INSTALLED & IN DWELLING UNITS WITH ATTACHED GARAGES.
16. CARBON MONOXIDE ALARMS MUST BE INSTALLED OUTSIDE OF EACH SEPARATE DWELLING UNIT SLEEPING AREA IN THE IMMEDIATE VICINITY OF THE BEDROOMS & ON EVERY LEVEL OF A DWELLING UNIT INCLUDING BASEMENTS.
17. CARBON MONOXIDE ALARMS SHALL RECEIVE THEIR PRIMARY POWER FROM BUILDING WIRING WHERE SUCH WIRING IS SERVED FROM A COMMERCIAL SOURCE & A BATTERY BACKUP.
18. THE CARBON MONOXIDE ALARM MUST BE INTERCONNECTED WHERE MORE THAN ONE ALARM IS REQUIRED TO BE INSTALLED WITHIN THE DWELLING OR SLEEPING UNIT.
19. CARBON MONOXIDE ALARMS MAY BE COMBINATION SMOKE ALARM UNITS.
20. IN DWELLING UNITS WITH NO COMMERCIAL POWER SUPPLY THE ALARM MAY BE SOLEY BATTERY OPERATED OR POWERED BY OTHER SOURCES RECOGNIZED FOR USE BY NFPA 720
21. KITCHEN PLUGS @ 18"OR GREATER COUNTER SPACE MUST BE 4' O.C. MAX. (REACH W/2'CORD) & MUST INCLUDE (2) SMALL APPLIANCE CIRCUITS.
22. TELEVISION & TELEPHONE LOCATIONS TO BE DETERMINED BY HOME OWNER & ELECTRICAL CONTRACTOR U.O.N.
23. IN ALL ROOMS OF THE DWELLING UNIT ALL 125-VOLT, 15 & 20 AMP RECEPTACLES SHALL BE LISTED TAMPER RESISTANT RECEPTACLES.
24. TANKLESS GAS WATER HEATERS: A. PROVIDE TEMPERATURE AND PRESSURE RELIEF VALVE WITH COPPER DRAIN TO EXTERIOR. B. SUPPLY NOT TO EXCEED PRESSURE RELIEF RATING. C. SEE TITLE 24 REPORT FOR REQUIREMENTS D. PLUMBING CONTRACTOR RECOMMENDS OVERSIZE PIPES FOR THIS UNIT (CONSULT CONTRACTOR)

DESIGN-IT-RIGHT ARCHITECTS
456 BROWN STREET, SAN FRANCISCO, CA
PH: (415) 355-9933 FAX 867-2309

SITE INFORMATION:
15555 JACKSON RD.
STOCKTON, CA

PROPOSED PROJECT FOR:
JOSEPH SAMPLE

DRAWING DESCRIPTION
ELECTRICAL PLAN

REVISION DATE	BY

DRAWN BY: M. ROGERS
DATE: FEB 2020
SCALE: 1/4"=1'-0"
JOB NAME: SAMPLE
ACAD DWG: SAMPLE
SHEET NO: 11
OF: 12

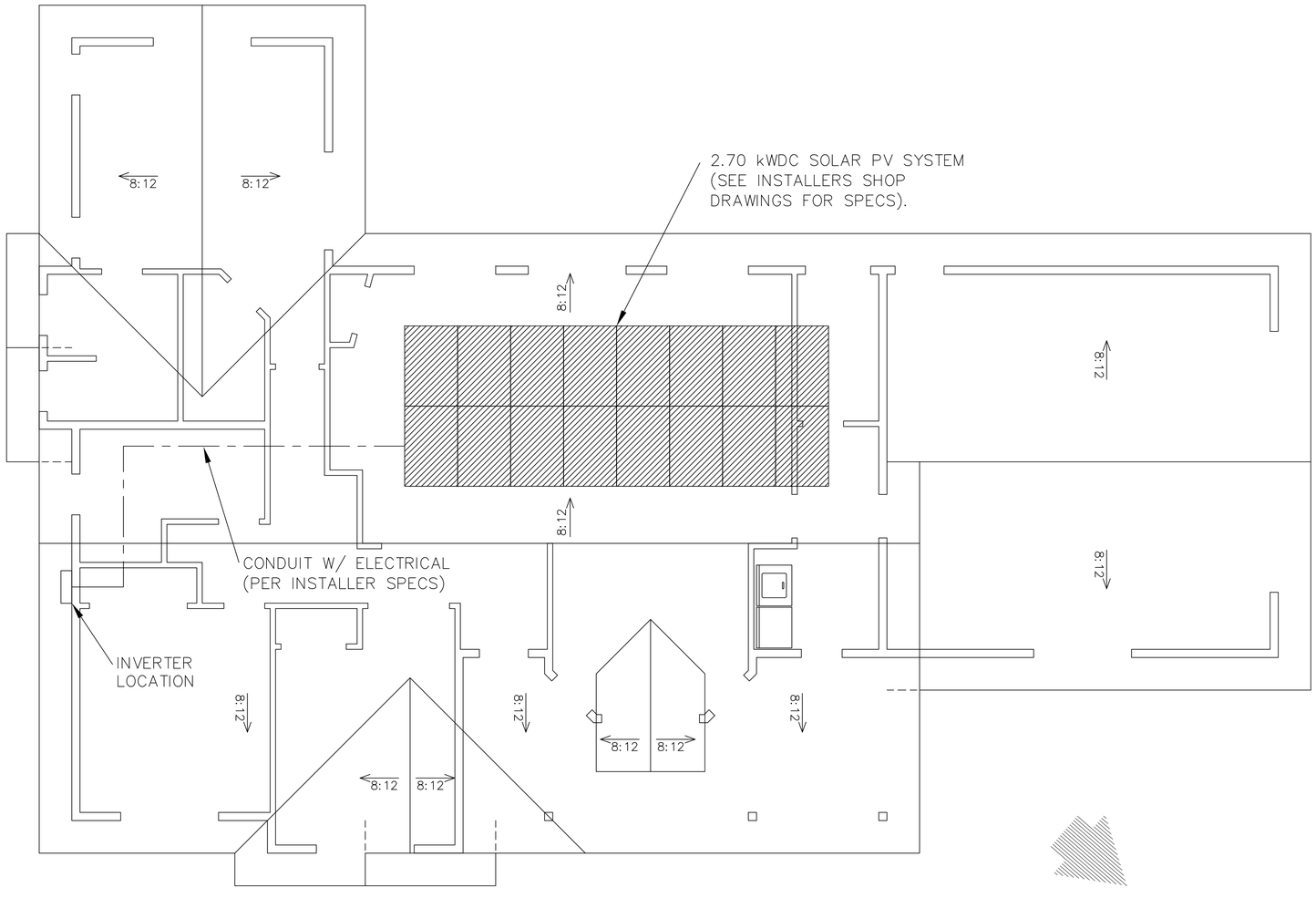

DESIGN–IT–RIGHT
ARCHITECTS
456 BROWN STREET, SAN FRANCISCO CA
PH: (415) 356–9833 FAX 867–5309

SITE INFORMATION:
15555 JACKSON RD.
STOCKTON, CA

PROPOSED PROJECT FOR:
JOSEPH SAMPLE

DRAWNING DESCRIPTION
SOLAR PLAN

REVISION DATE	BY

DRAWN BY
M. ROGERS
DATE
FEB 2020
SCALE
1/4"=1'–0"
JOB NAME
SAMPLE
ACAD DWG
SAMPLE
SHEET NO
12
OF
12